Spare Part Catalogue

Star Cool refrigeration unit | Model SC – MCI40, SCU and SCI

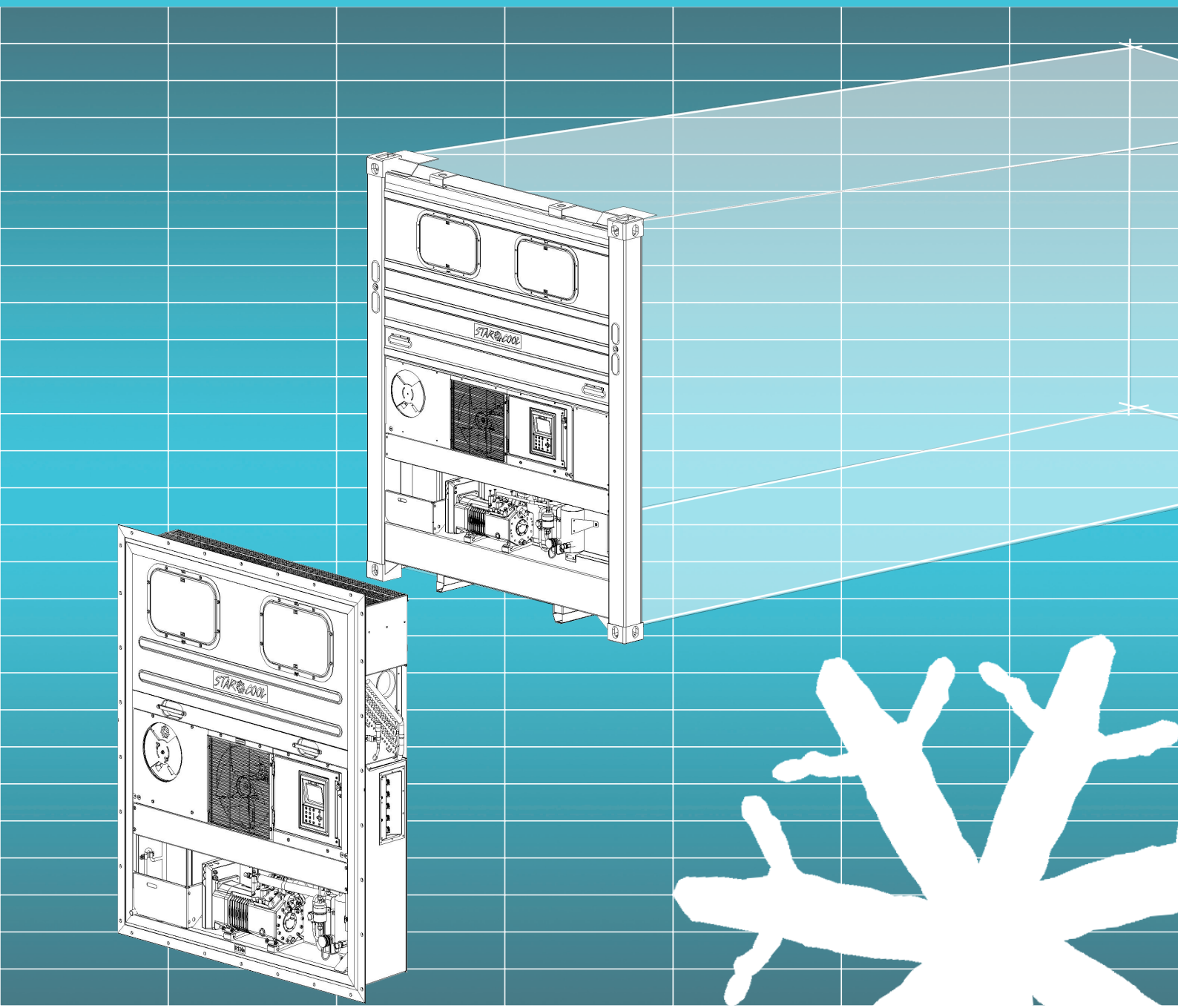

Version 810910B - April 2010

STAR COOL
... Cool Thinking!

Introduction

The Star Cool reefer machine incorporates innovative features compared to the traditional equipment in the market. These features include electronically controlled expansion valves, economizer, frequency converter and a very user friendly control panel. All of the features contribute to a better performance and makes the Star Cool reefer machine more efficient and economical in use.

Our engineers constantly work on improving the reefer machine and as the design changes new spare parts will be added. This is why some of the components in this catalogue are shown in different versions - when ordering a spare part, make sure to compare the original part to the part shown in the drawings. Spare parts added after printing of this catalogue will be shown on Star Cool e-Sales.

Please note:

- Star Cool Picture Frame Unit: SCU
- Star Cool Integrated: SCI
- Controlled atmosphere: CA
- Automatic Ventilation: AV+

Furthermore, please also note an indentation indicates that the item is included in above mentioned item, but can also be ordered separately.

If in doubt how to order Star Cool spare parts, refer to the chapter concerning this subject.

Use only genuine Star Cool spare parts. This will ensure a long and reliable life time for your reefer machines.

In case of technical problems the Star Cool service team will be at your disposal. We can be reached 24 hours a day on service@starcool.dk or phone: +45 73 64 35 00

STAR COOL

Bjerndrupvej 47, 6360 Tinglev, Denmark
Phone: +45 73 64 34 00
Fax.: +45 73 64 35 69
E-mail: starcool@starcool.dk
www.starcool.dk

Table of contents

Where to find Page 4

1.0 Front module Page 6
Cover plate for condenser coil and for air exchange.

2.0 Condenser module Page 8
Controller section, condenser fan section, condenser section, valves and economizer section, receiver section, compressor section, frequency converter section.

3.0 Unit frame module Page 21
Inspection cover, air exchange section, various mounting.

4.0 Evaporator module Page 25
Evaporator fan section, evaporator section, back plate section

5.0 Controlled atmosphere Page 30

9.0 Consumable parts Page 32

Index Page 33

Guideline: Order procedure Page 36

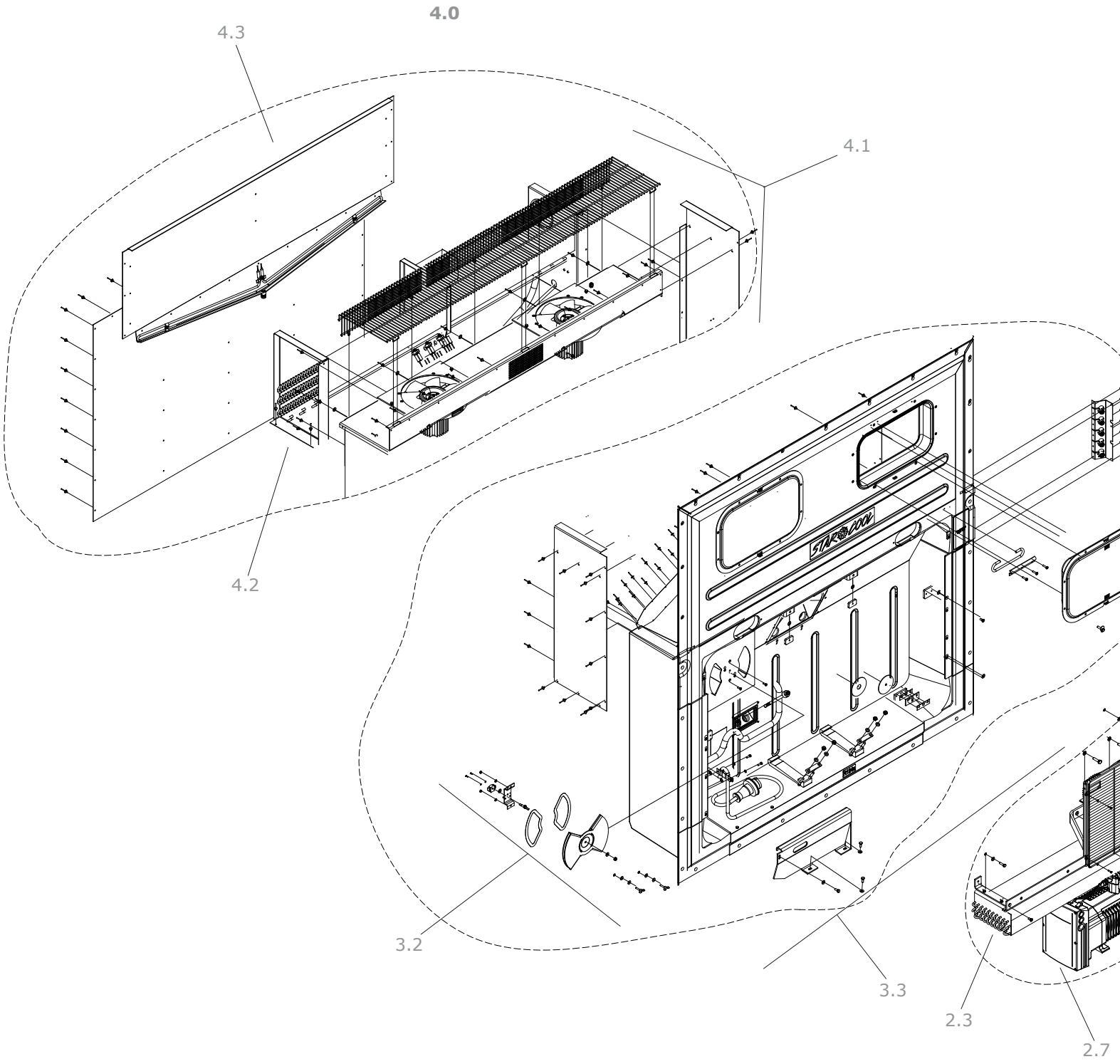
4.0
4.3
4.1
4.2
3.2
3.3
2.3
2.7

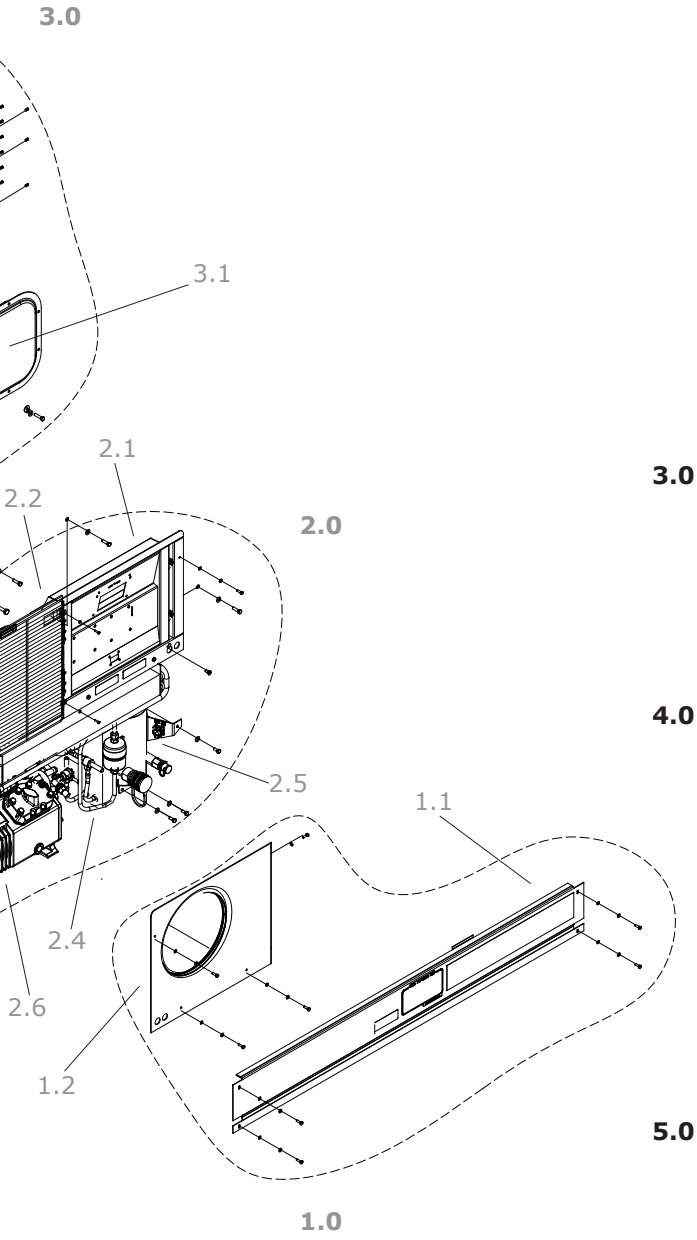

1.0 Front module

1.1 Cover plate for condenser coil Page 6
1.11 SCI Page 6
1.12 SCU Page 6
1.2 Cover plate for air exchange Page 7
1.21 SCI Page 7
1.22 SCU Page 7

2.0 Condenser module

2.1 Controller section Page 8
2.11 CIM5 controller Page 8
2.12 CIM6 controller Page 10
2.2 Condenser fan section Page 12
2.21 SCI Page 12
2.22 SCU Page 13
2.3 Condenser section Page 14
2.4 Valves and economizer section Page 15
2.5 Receiver section Page 16
2.6 Compressor section Page 18
2.7 Frequency converter section Page 20

3.0 Unit frame module

3.1 Inspection cover Page 21
3.2 Air exchange section Page 23
3.3 Various mounting Page 24

4.0 Evaporator module

4.1 Evaporator fan section Page 25
4.11 SCI Page 25
4.12 SCU Page 26
4.2 Evaporator section Page 27
4.3 Back plate section Page 28
4.31 SCI Page 28
4.32 SCU Page 29

5.0 Controlled atmosphere

5.1 CA Page 30
5.2 AV+ Page 31

9.0 Consumable parts Page 32

1.11 SCI

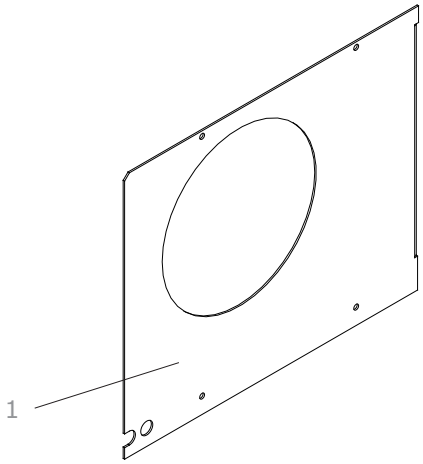

Pos.	Item	Item no.
1	Cover plate, air ex. (SCI)	815208D

1.12 SCU

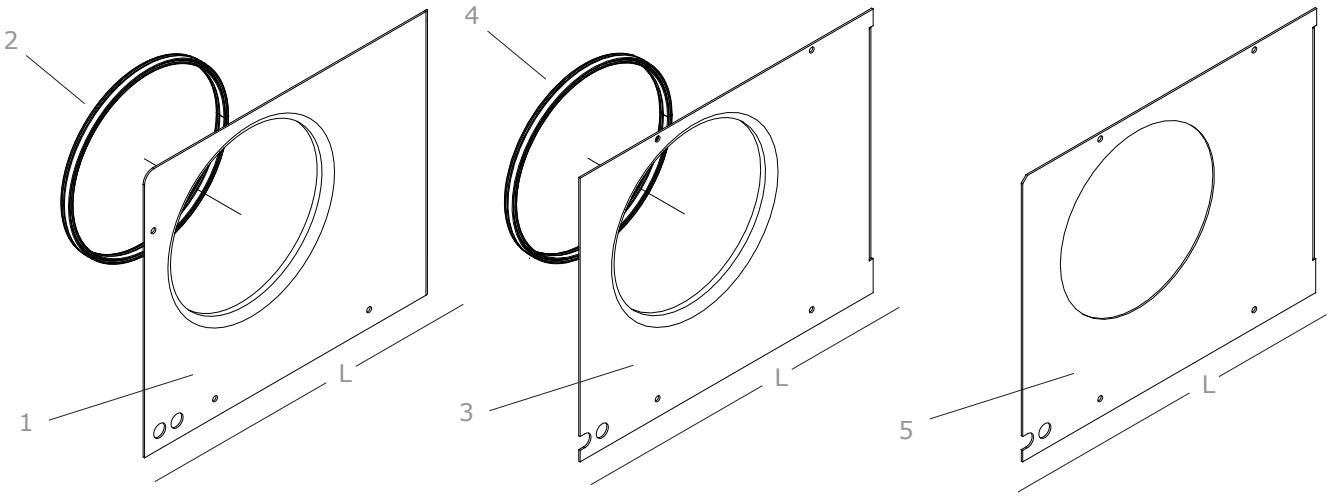

Pos.	Item	Item no.
1	Cover plate, air ex. (L=594 mm)	815208B
2	Seal, cover plate, air ex.	815508B
3	Cover plate, air ex. (L=610 mm)	815208C
4	Seal, cover plate, air ex.	815508B
5	Cover plate, air ex. (L=610 mm)	815208E

1.21 SCI

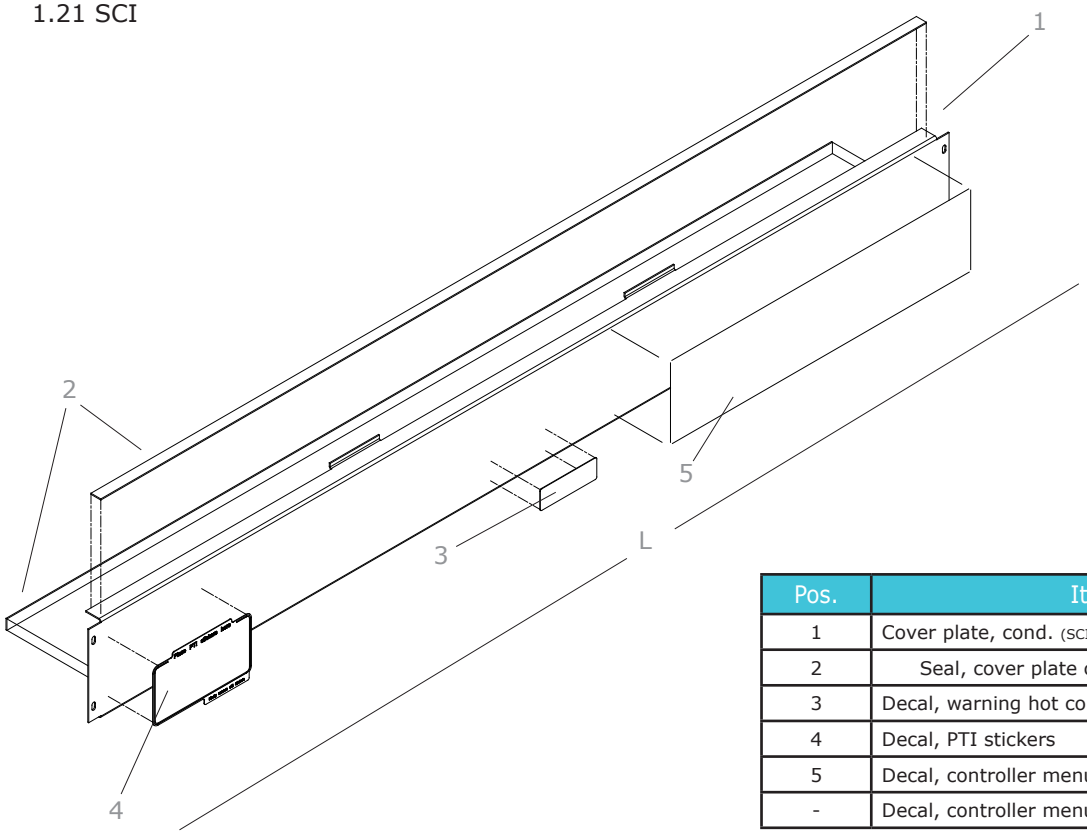

Pos.	Item	Item no.
1	Cover plate, cond. (SCI) (L=1715 mm)	815209D
2	Seal, cover plate cond.	815509B
3	Decal, warning hot components	815571B
4	Decal, PTI stickers	815573B
5	Decal, controller menu CIM 6	815588C
-	Decal, controller menu CIM 5	815588B

1.22 SCU

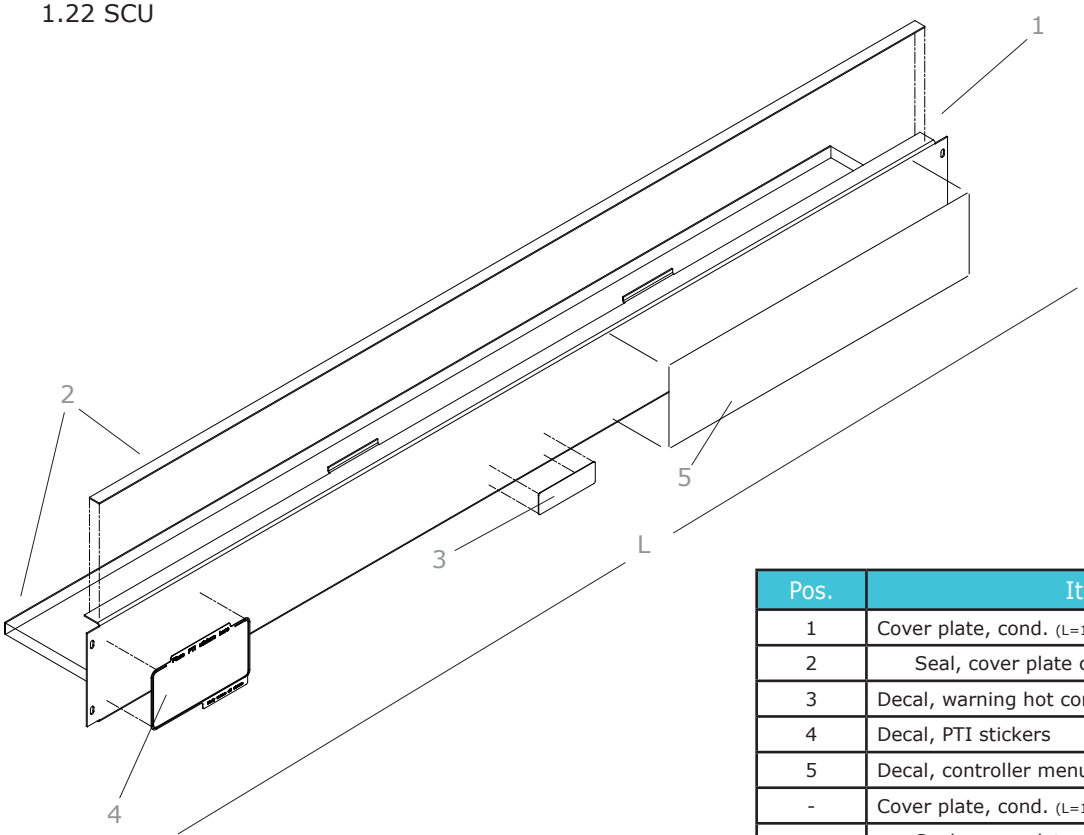

Pos.	Item	Item no.
1	Cover plate, cond. (L=1715 mm)	815209B
2	Seal, cover plate cond.	815509B
3	Decal, warning hot components	815571B
4	Decal, PTI stickers	815573B
5	Decal, controller menu CIM 5	815588B
-	Cover plate, cond. (L=1751 mm)	815209C
-	Seal, cover plate cond.	815509B
-	Decal, controller menu CIM 6	815588C

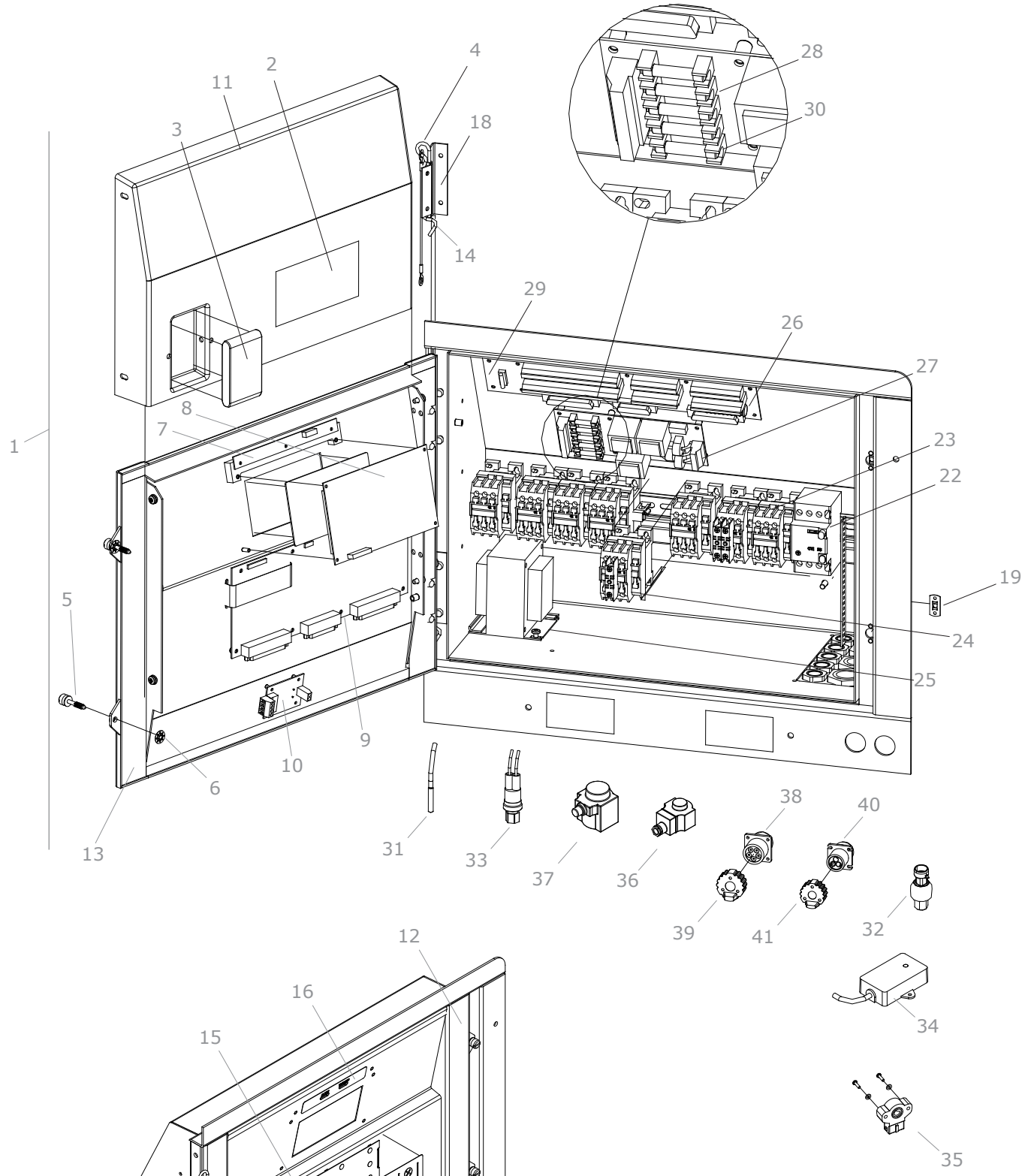
1
2
3
4
5
6
7
8
9
10
11
12
13
14
15
16
17
18
19
20
21
22
23
24
25
26
27
28
29
30
31
32
33
34
35
36
37
38
39
40
41

Pos.	Item	Item no.
1	Controller door, complete CIM 5	818320B
2	Decal, electrical diagram CIM 5	815589B
3	Batt. pack CIM 5	818536B
4	Hinge pin	814644B
5	Screw, controller door CIM 5	819693C
6	Retainer for screw	819694B
7	LED PCB CIM 5	818517A
8	Display PCB CIM 5	818515A
9	Controller module CIM 5	818255C
10	On/Off PCB CIM 5	818525B
11	Cover, controller door CIM 5	814673B
-	Cable set, X1 - X2 - X3 CIM 5	818561B
12	Controller door, CIM 5	818310B
13	Seal, controller door CIM 5	814562B
14	Hinge part 2	814643B
15	Keypad CIM 5	818527B
16	Cover foil, LED CIM 5	818542B
17	Cover foil, On/Off PCB CIM 5	818544B
18	Hinge part 1	814642B
19	Receptacle screw, contr. door	819695C
20	Decal, warning high voltage	815575B
21	Decal, discon. before welding	815578B
22	Main circuit breaker CIM 5	818520A
23	Contactor	818521B
24	Auxiliary contact (white dot)	818522B
25	Transformer, 145 VA CIM 5	818518B
26	Terminal block PCB CIM 5	818526C
27	Power meas PCB CIM 5	818511B
28	Fuse, 0.63 A	818546B

Pos.	Item	Item no.
29	Fuse, 6.3 A	818545B
30	Fuse, 10 A	818530A
31	Temperature sensor	818550A
32	Pressure transmitter, LP (AKS)	819503A
32	Pressure transmitter, LP (NSK)	819503C
32	Pressure transmitter, HP (AKS)	819504A
32	Pressure transmitter, HP (NSK)	819504C
33	High pressure switch	819501A
34	Humidity sensor CIM 5	818551A
35	Air ex. sensor	818276A
36	Solenoid coil, 14W 24VDC	818553A
37	Solenoid coil, 18W 24VDC	818554A
38	Retriever socket	819595B
39	Retriever socket cap	819630B
40	USDA socket	819633A
41	USDA socket cap	819634A
-	Cable set, internal CIM 5	818461B
-	Cable, air exchange sensor	818572B
-	Cable, data retrival	818575A
-	Cable, FC power	818565B
-	Cable, FC communication	818566B
-	Cable, humidity sensor CIM 5	818563A
-	Cable, p. transmitter (AKS)	818564A
-	Cable, p. transmitter (NSK)	818564B
-	Interlock, contactor	818523B
-	Splice kit, AKS to NSK	818260A
-	RMM module	819621B

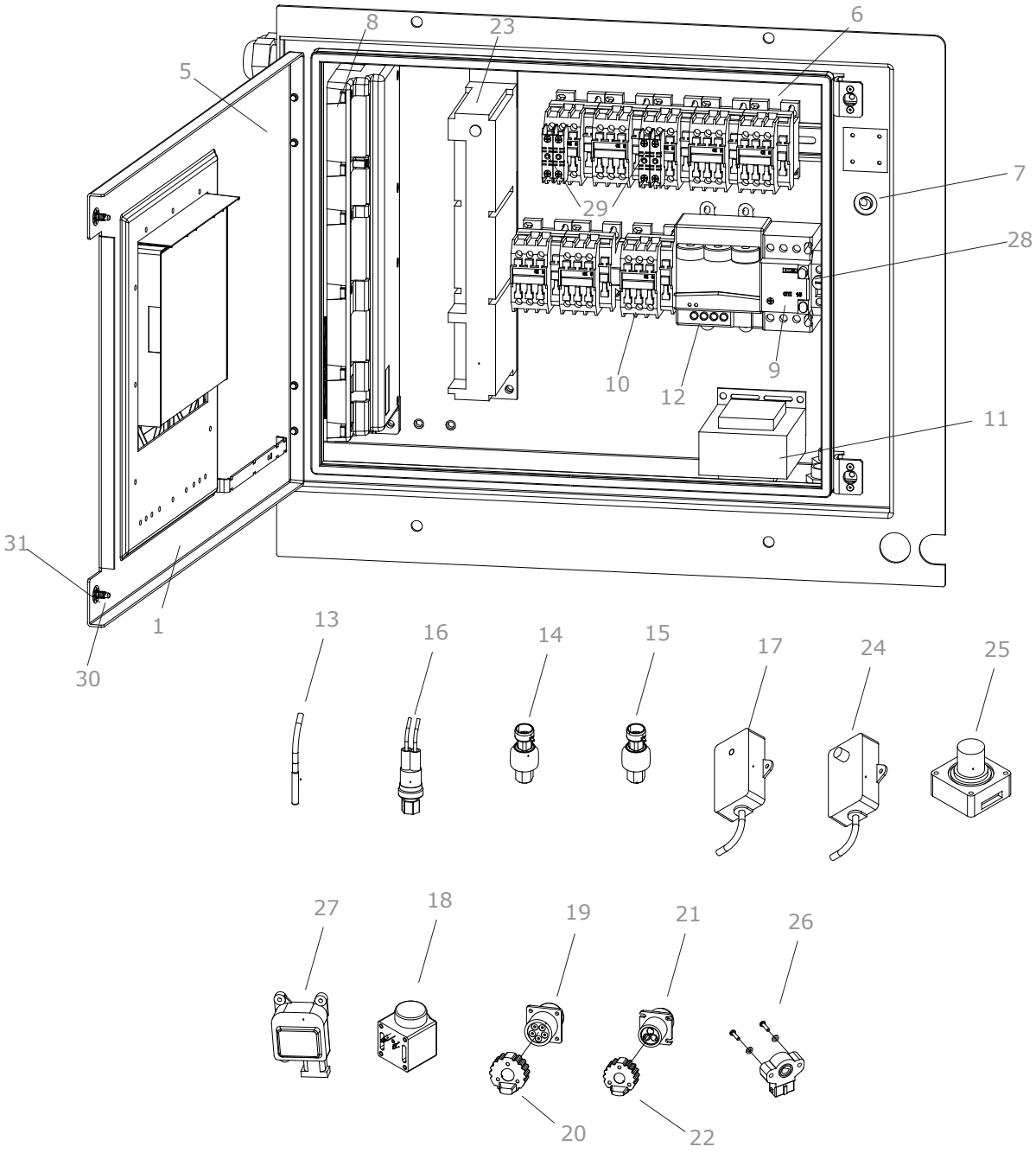
8
23
6
5
7
29
28
10
12
9
11
31
1
30
13
16
14
15
17
24
25
27
18
19
21
26
20
22
2
3
4
33
32

Pos.	Item	Item no.
1	Controller door, CIM 6	818310C
2	Hinge part CIM 6	814642C
3	Hinge pin	814644B
4	User panel CIM 6	818513A
-	Cover foil, LED CIM 6	818542C
5	Decal, electrical diagram CIM 6	815589C
6	Seal, controller door CIM 6	818790A
7	On/Off switch CIM 6	818525C
8	Controller module CIM 6	818510D
9	Main circuit breaker CIM 6	818520B
10	Contactor	818521B
11	Transformer, 105 VA CIM 6	818518C
12	Power meas module CIM 6	818511C
13	Temperature sensor	818550A
14	Pressure transmitter, LP (NSK)	819503C
15	Pressure transmitter, HP (NSK)	819504C
16	High pressure switch	819501A
17	Humidity sensor CIM 6	818551B
18	Solenoid coil, 10W 24VAC	818554B
19	Retriever socket	819595B
20	Retriever socket cap	819630B
21	USDA socket	819633A
22	USDA socket cap	819634A
23	RMM module	819621B
24	Sensor, O_2 (CA)	818740A
25	Sensor, CO_2 (CA/AV)	818745A
26	Air exchange sensor	818276A
27	Air ex. motor (CA/AV)	818275A
28	Fuse holder, 0.4 A	818534A
29	Auxiliary contact (white dot)	818522B
-	Auxiliary contact (red dot)	818522C
30	Screw, controller door CIM 6	819693D

Pos.	Item	Item no.
31	Retainer for screw	819694B
32	Decal, discon.before welding	815578B
33	Decal, warning high voltage	815575B
-	2 pin connector (3.81 mm / 90°)	818770A
-	2 pin connector (5.08 mm / 90°)	818778A
-	3 pin connector (3.81 mm / 90°)	818771A
-	4 pin connector (3.81 mm / 0°)	818776A
-	4 pin connector (3.81 mm / 90°)	818772A
-	5 pin connector (3.81 mm / 0°)	818777A
-	5 pin connector (3.81 mm /90°)	818773A
-	6 pin connector (3.81 mm / 90°)	818774A
-	10 pin connector (3.81 mm / 90°)	818775A
-	Batt. pack, rechargeable CIM 6	818536C
-	Cable set, internal CIM 6	818461C
-	Cable, air ex. motor (CA/AV)	818754A
-	Cable, air ex. sensor	818572B
-	Cable, CA controller module	818465A
-	Cable, data retrival	818575A
-	Cable, FC power	818565B
-	Cable, FC communication	818566B
-	Cable, humidity sensor CIM 6	818563B
-	Cable, p. transmitter (NSK)	818564B
-	Cable, solenoid coil	818760A
-	Cable, vacuum pump motor	818752A
-	Decal, electrical diagram CA	815589D
-	Fuse, 0.4 A	818531A
-	Interlock, contactor	818523B
-	Controller module (CA)	818512A

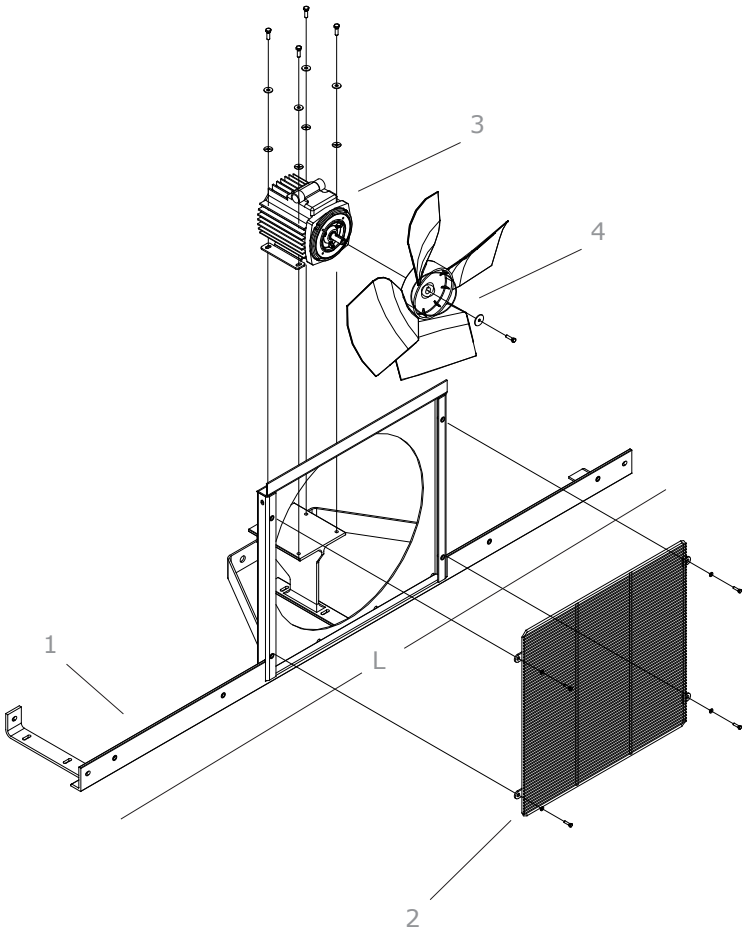

Pos.	Item	Item no.
1	Cond. frame, square (L=1701 mm)	814201D
2	Fan grill, cond., square	814541C
3	Motor, condenser fan	819590B
4	Fan blade, condenser	819543B
-	Service kit, condenser motor	818231B

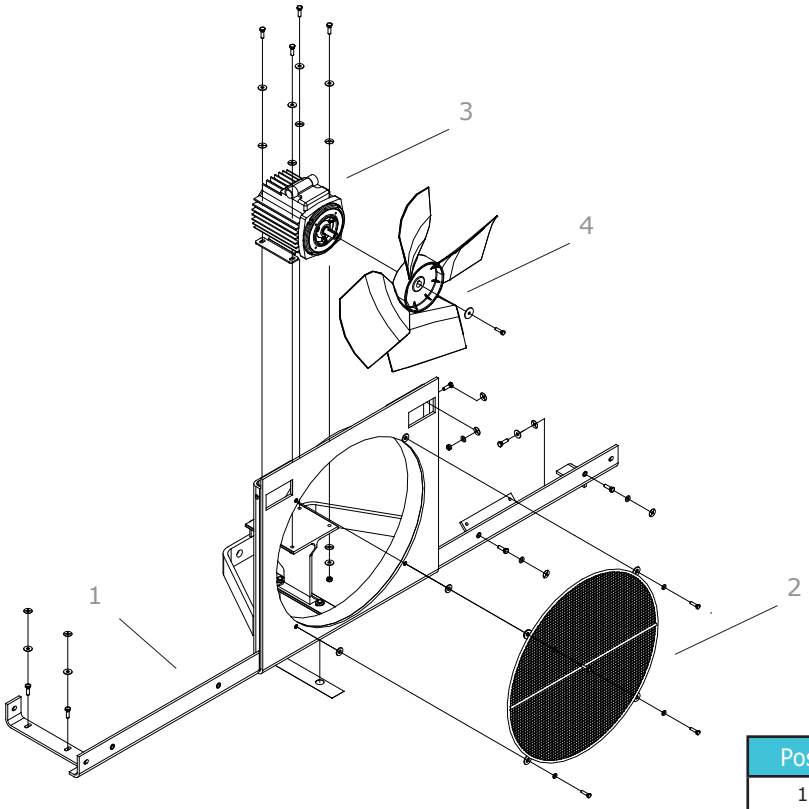

Pos.	Item	Item no.
1	Condenser frame, round	814201B
2	Fan grill, cond., round	814541B
3	Motor, condenser fan	819590B
4	Fan blade, condenser	819543B
-	Service kit, condenser motor	818231B

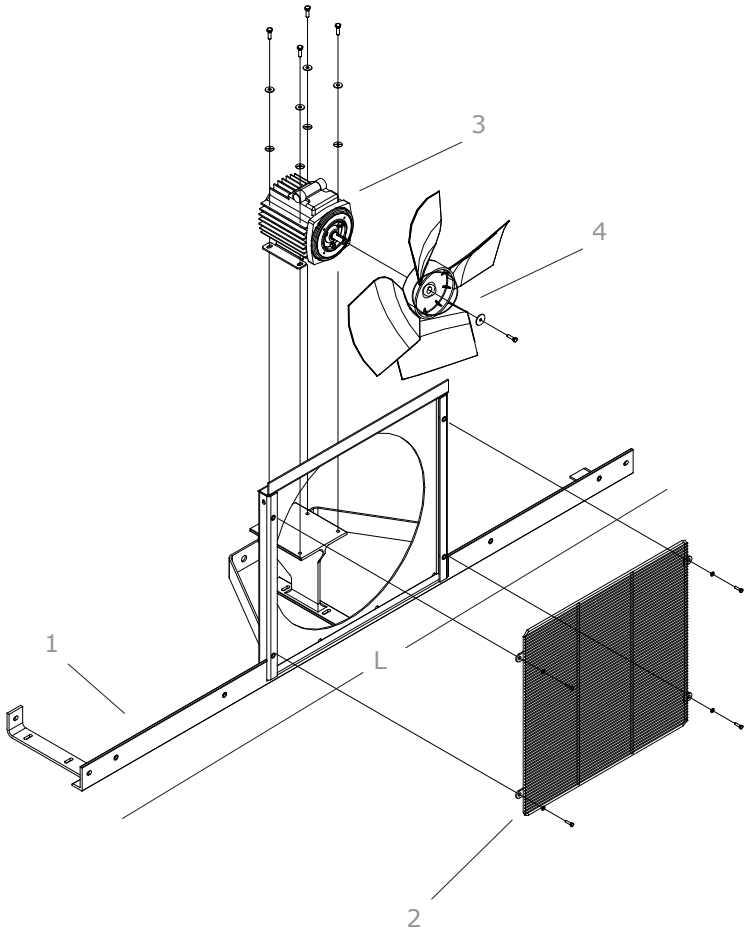

Pos.	Item	Item no.
1	Cond. frame, square (L=1701 mm)	814201D
2	Fan grill, cond., square	814541C
3	Motor, condenser fan	819590B
4	Fan blade, condenser	819543B
-	Cond. frame, square (L=1625 mm)	814201C
-	Service kit, condenser motor	818231B

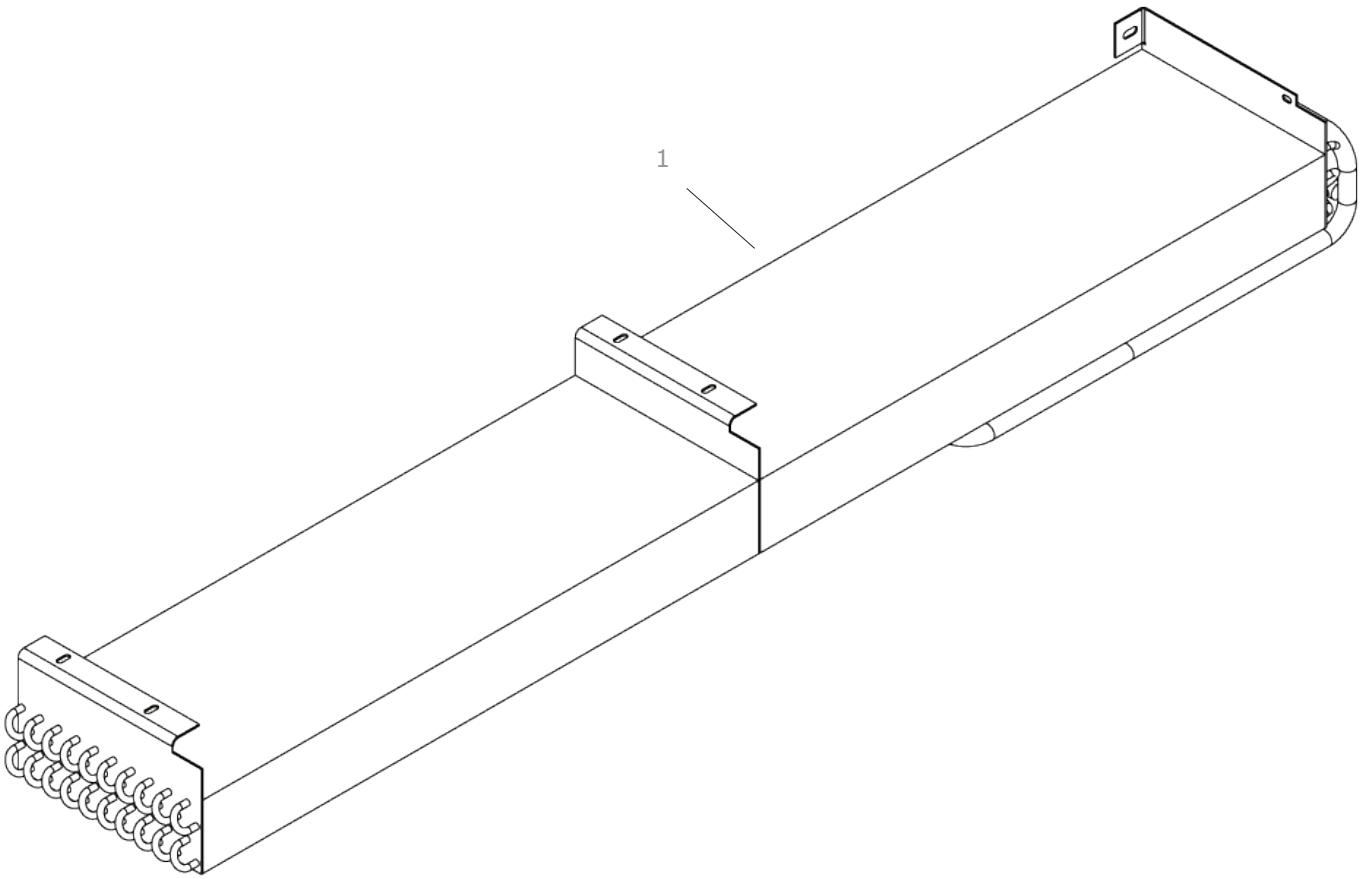

Pos.	Item	Item no.
1	Condenser coil	819526B

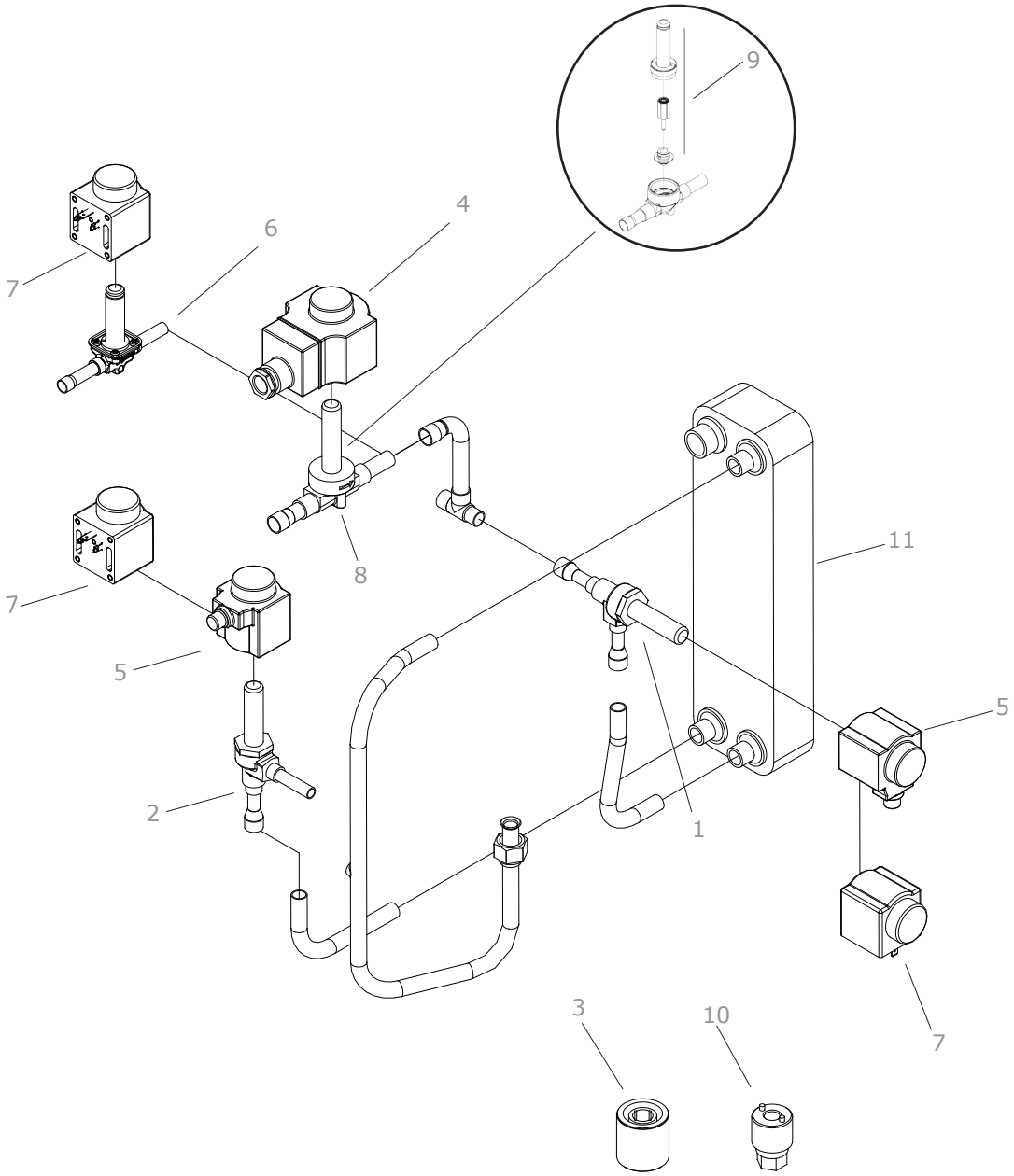

Pos.	Item	Item no.
1	Expansion valve, evaporator	819738B
2	Expansion valve, economizer	819737B
3	Permanent magnet	818652A
4	Solenoid coil, 14W 24VDC	818553A
5	Solenoid coil, 18W 24VDC	818554A
6	Hot gas valve	819740C
7	Solenoid coil, 10W 24VAC	818554B
8	Hot gas valve	819740B
9	Hot gas valve, service kit	818675B
10	Tool, hot gas valve	818676B
11	Economizer	814667B
-	Insulation, economizer	814571B

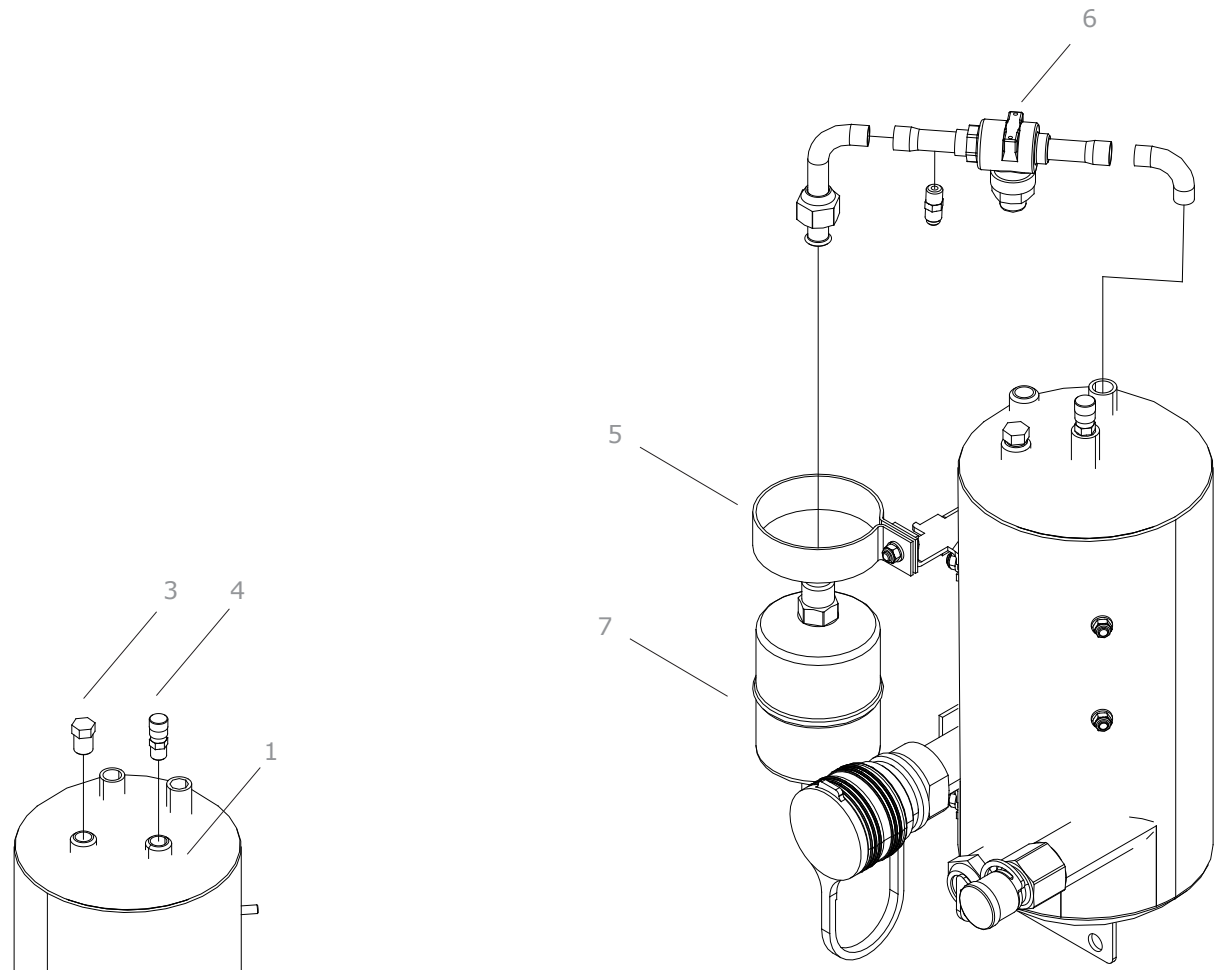

Pos.	Item	Item no.
1	Receiver, water cooled cond.	814539B
2	Sight glass, receiver kit	818235B
3	Melt fuse kits	818236B
4	Air release valve, receiver	819747B
5	Filter mounting ring	814538B
6	Stop valve, receiver	819500C
7	Drying filter	819502A
8	Water outlet coupling, female	819536C
9	Water inlet coupling, male	819537C
10	Plug, water outlet coupling	819540B
11	Plug, water inlet coupling	819541B

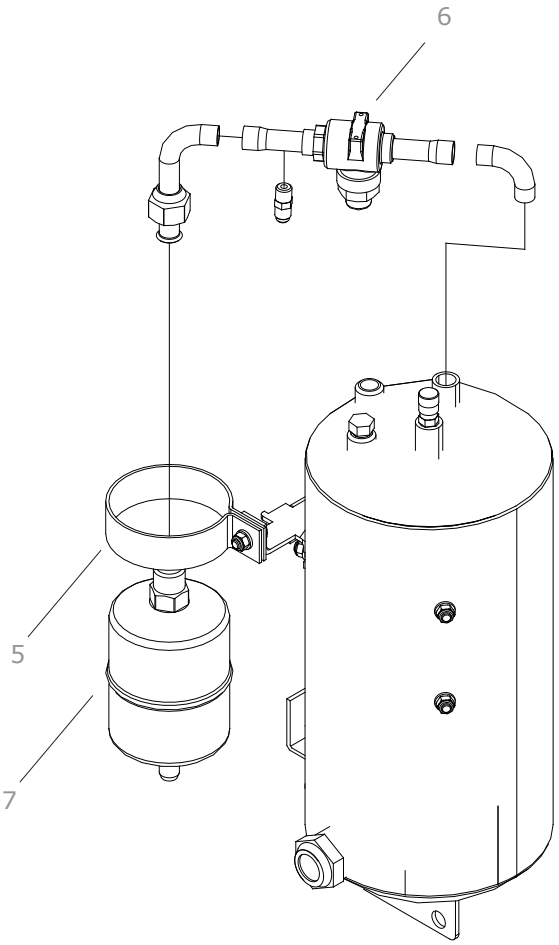

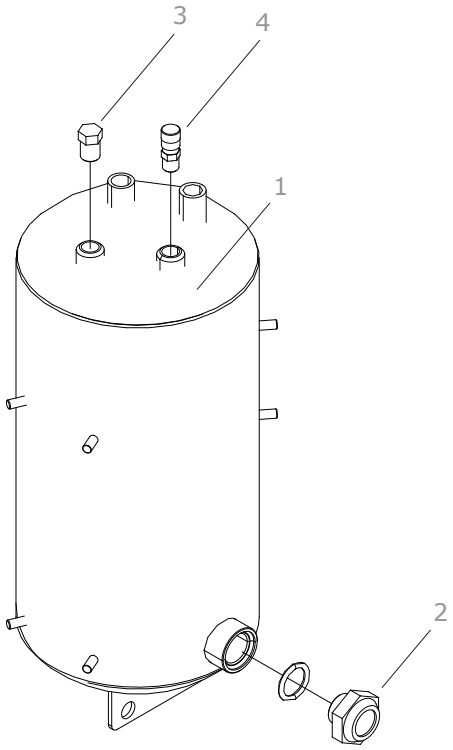

Pos.	Item	Item no.
1	Receiver	814540B
2	Sight glass, receiver kit	818235B
3	Melt fuse kits	818236B
4	Air release valve, receiver	819747B
5	Filter mounting ring	814538B
6	Stop valve, receiver	819500C
7	Drying filter	819502A

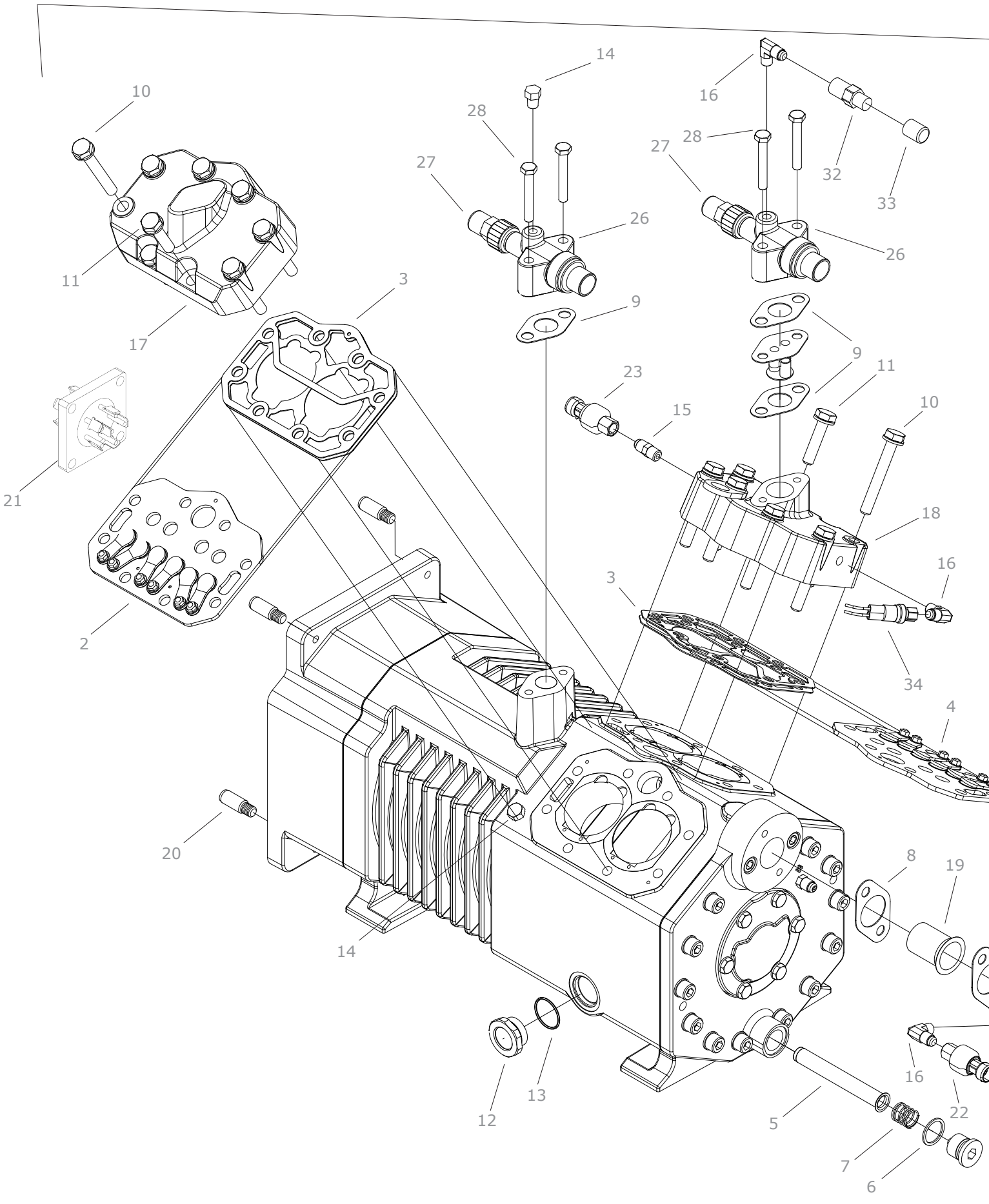
14
10
28
16
28
27
27
32
33
26
26
11
3
9
17
9
23
11
15
10
21
18
2
16
3
34
4
20
8
19
14
12
13
5
16
22
7
6

Pos.	Item	Item no.
1	Compressor	818658B
2	Compressor valve plate, LP	818601B
3	Cylinder head gasket kit	818605B
4	Compressor valve plate, HP	818602B
3	Cylinder head gasket kit	818605B
5	Oil filter, compressor	818638B
6	Gasket, compressor oil plug	818636B
7	Spring, compressor oil filter	818637B
8	Gasket, service valve, LP	818661B
9	Gasket, compressor stop valve	818656B
10	Bolt, cylinder head, large	818612A
11	Bolt, cylinder head, small	818613A
12	Sight glass	818633B
13	O-ring, sight glass	818634B
14	Plug, compressor	819745B
15	Schräder valve, straight	819753A
16	Schräder valve, angle	819754A
17	Cylinder head, LP with gasket	818610B
18	Cylinder head, HP with gasket	818611B
19	Suction filter, compressor	818662B
20	Threaded bushing, FC mounting	819766B
21	Terminal block, compressor	818639B
-	BSE55, compressor oil	818667B
-	Compressor gaskets, complete	818872A
-	Bearing bush, crankcase side	818856A
-	Compressor cylinder liner	818851A
-	Compressor crankshaft	818854A
-	Connecting rod, complete (LP)	818860A
-	Connecting rod, complete (HP)	818861A
-	Compressor pistons, complete	818850A
-	Bearing bush	818857A
-	Compressor oil pump, complete	818869A
-	Pressure relief valve	818866A
-	Check valve	818864A
22	Pressure transmitter, LP (NSK)	819503C
23	Pressure transmitter, HP (NSK)	819504C
24	Service valve, LP	818623B
25	Cap, service valve, LP	818629B
26	Compressor stop valve	819750B
27	Cap, compressor stop valve	818630B
28	Bolt, compressor stop valve	818655B
29	Bolt, service valve, LP	818660B
30	Evacuation valve, LP	818625B
31	Cap, evacuation valve, LP	818631B
32	Evacuation valve, HP	818626B
33	Cap, evacuation valve, HP	818632B
34	High pressure switch	819501A
-	Pressure transmitter, LP (AKS)	819503A
-	Pressure transmitter, HP (AKS)	819504A
-	Schräder valve, T	819755B
-	Splice kit, AKS to NSK	818260A

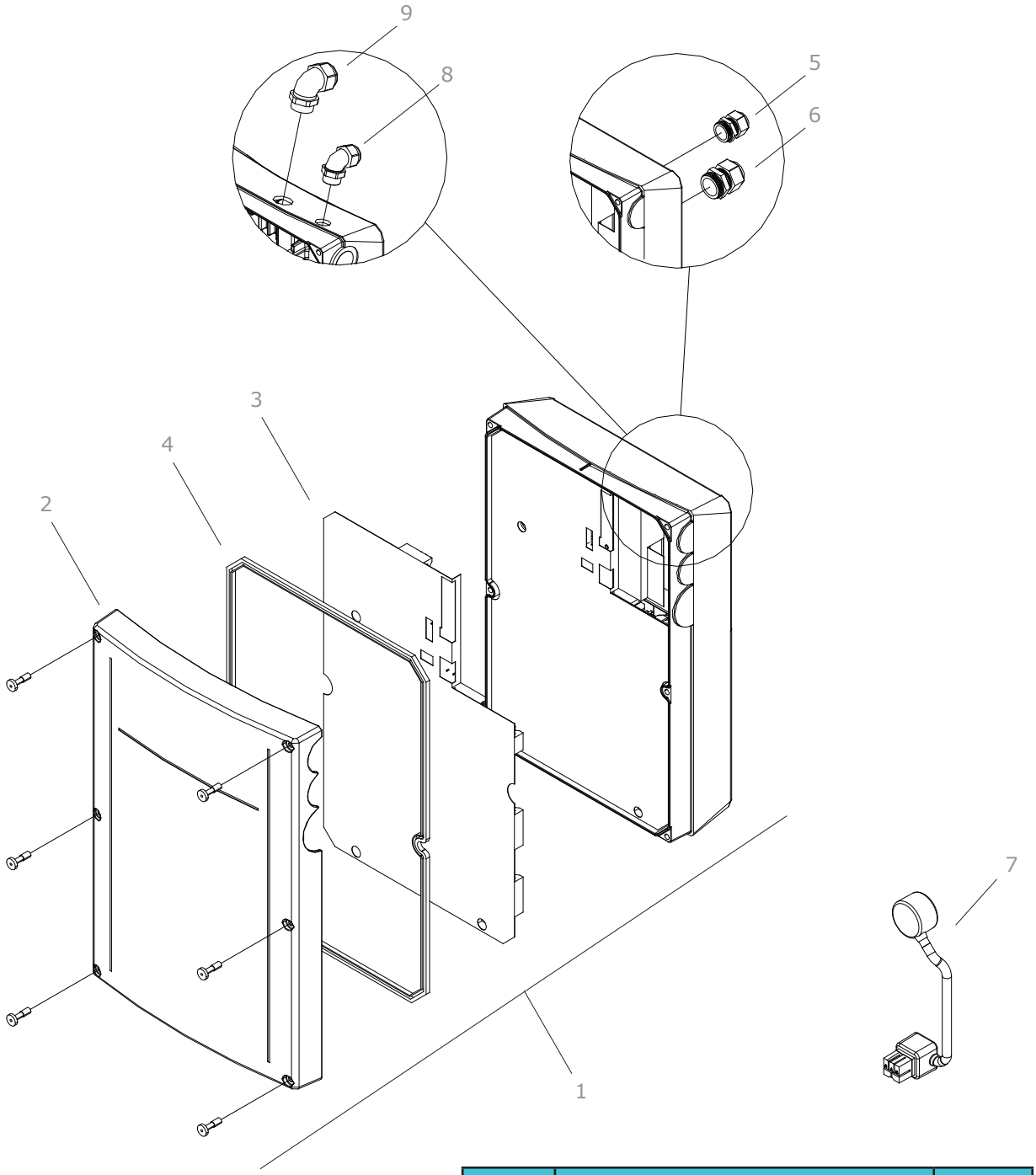

Pos.	Item	Item no.
1	Frequency converter, complete	818242C
2	Frequency converter cover	814653C
-	Decal, FC connection	815591C
-	Decal, FC bypass	815594C
3	Frequency conv. safety cover	814654C
-	FC, mounting kit	818232B
4	FC, gasket service kit	818233B
5	Cable gland, M 16	819672B
6	Cable gland, M 20	818665B
7	Motor cable, FC and compressor	814247C
8	Angle, cable gland M 16	819775B
9	Angle, cable gland M 20	819776B

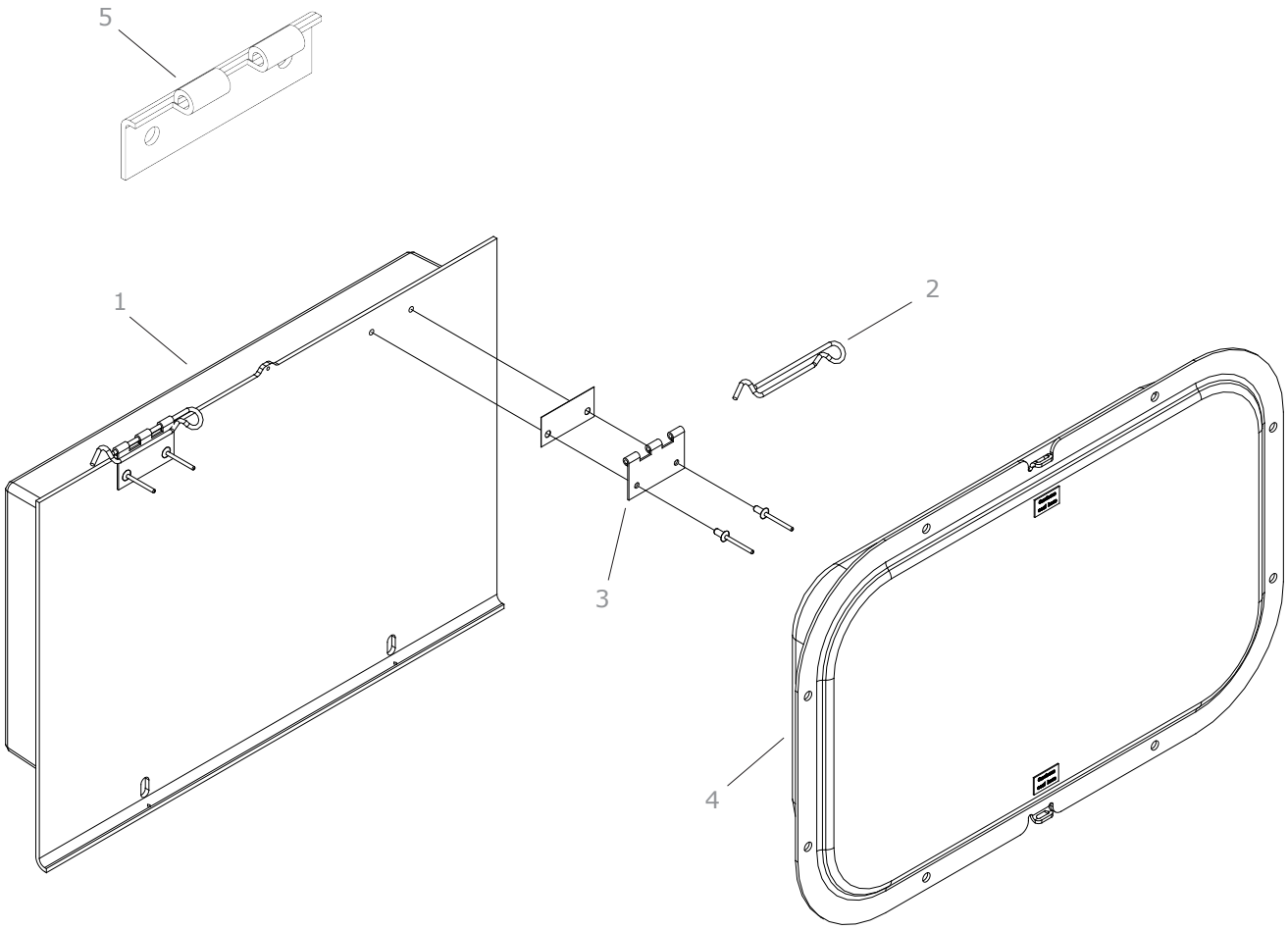

Pos.	Item	Item no.
1	Inspection cover, complete	815210B
2	Hinge pin	814644B
3	Hinge part, inspection cover	815534B
4	Inspection cover, complete	815210C
5	Hinge part 2	814643B

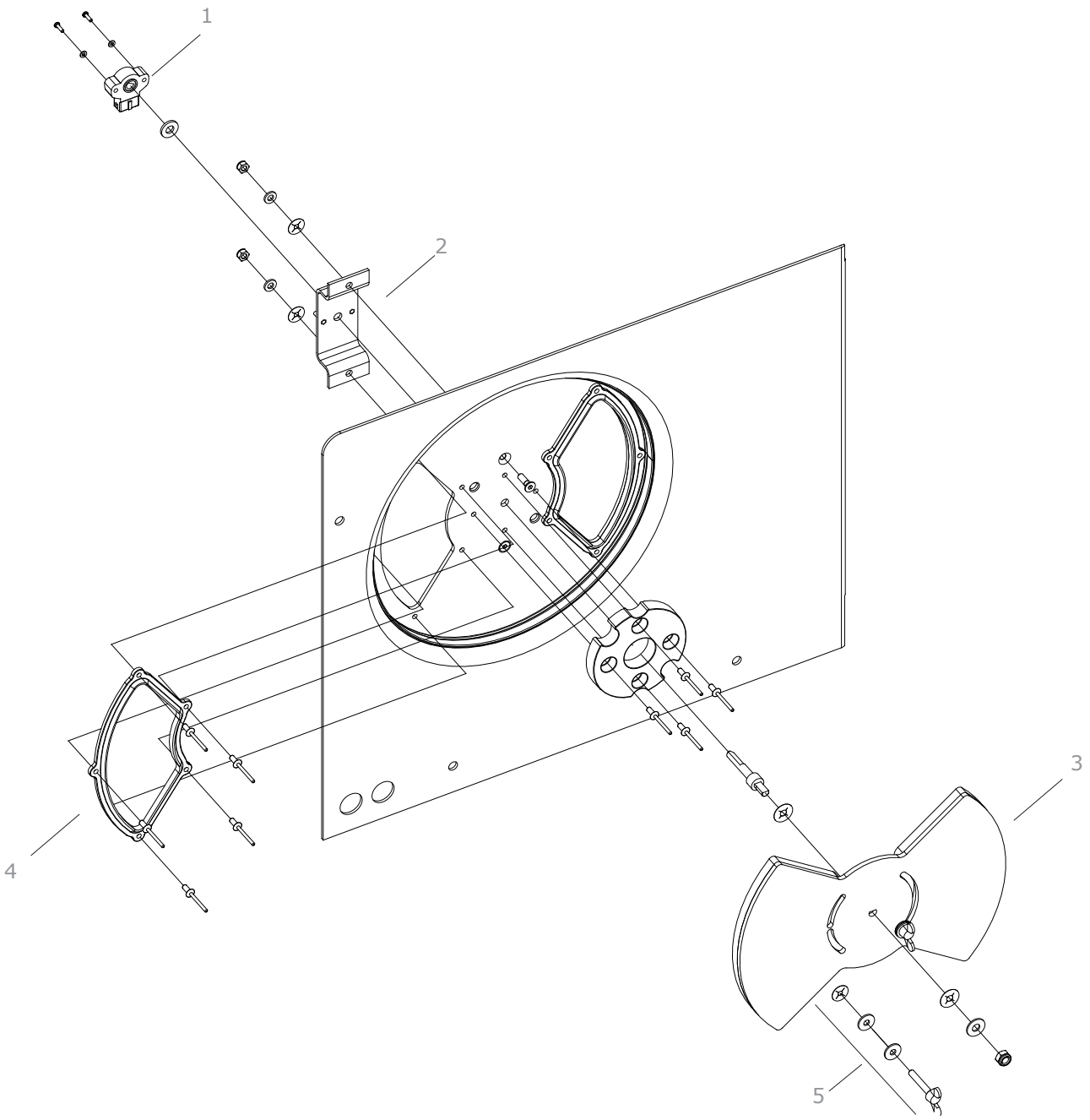

Pos.	Item	Item no.
1	Air ex. sensor	818276A
2	Air ex. sensor bracket	815206B
3	Air ex. damper, assembly	818250C
4	Insect mesh, air exchange	815553B
5	Wing screw kit (10 pcs)	818267B

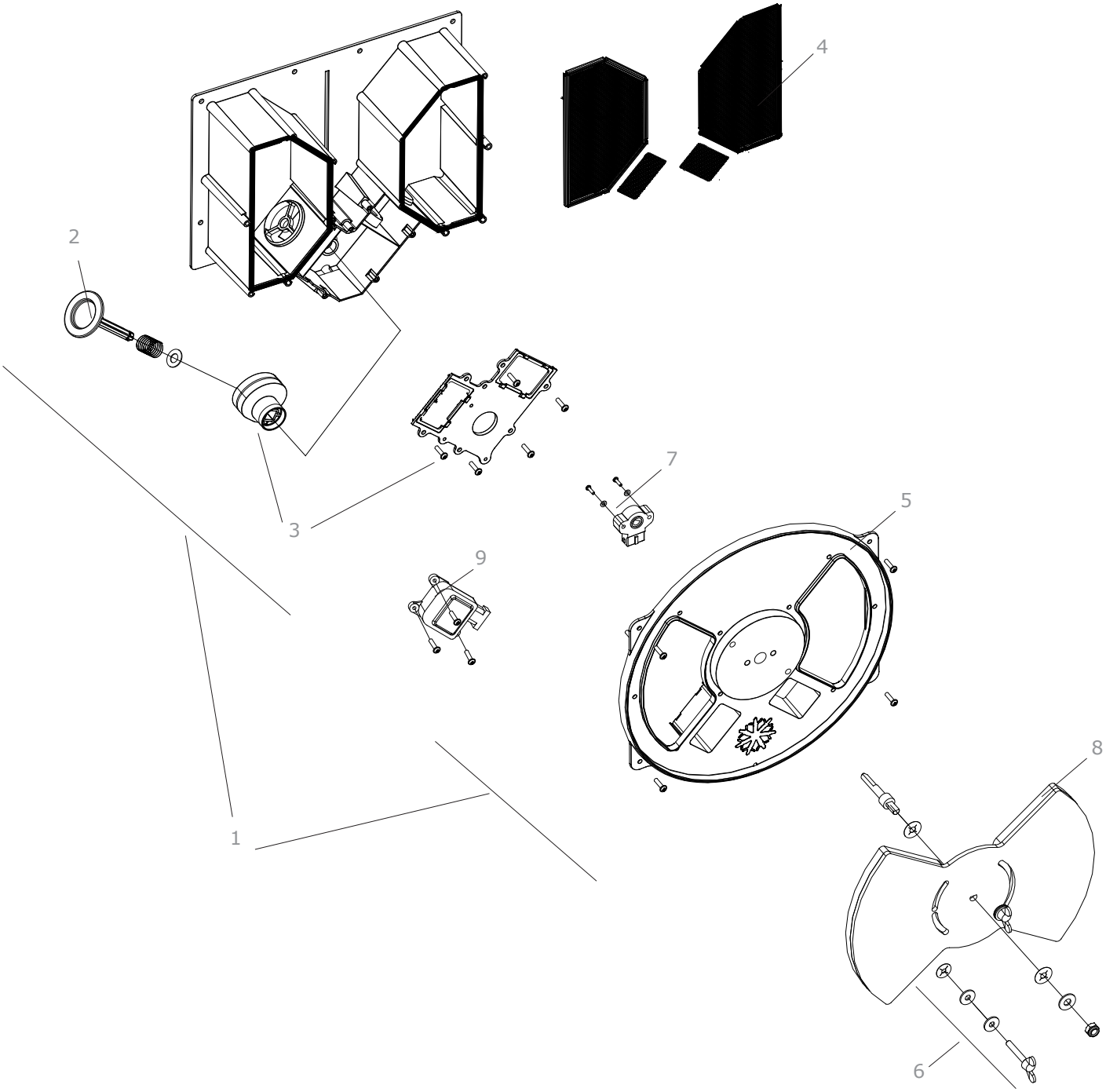

Pos.	Item	Item no.
1	Air ex. module, complete	818270A
2	Air ex. module valves	818271A
3	Air ex. module, camshaft	818272A
4	Air ex. module, insect mesh	818273A
5	Air ex. module, front	818274A
6	Wing screw kit (10 pcs)	818267B
7	Air ex. sensor	818276A
8	Air ex. damper, assembly	818250C
9	Air ex. motor (CA/AV)	818275A
-	Cable, air ex. motor (CA/AV)	818754A

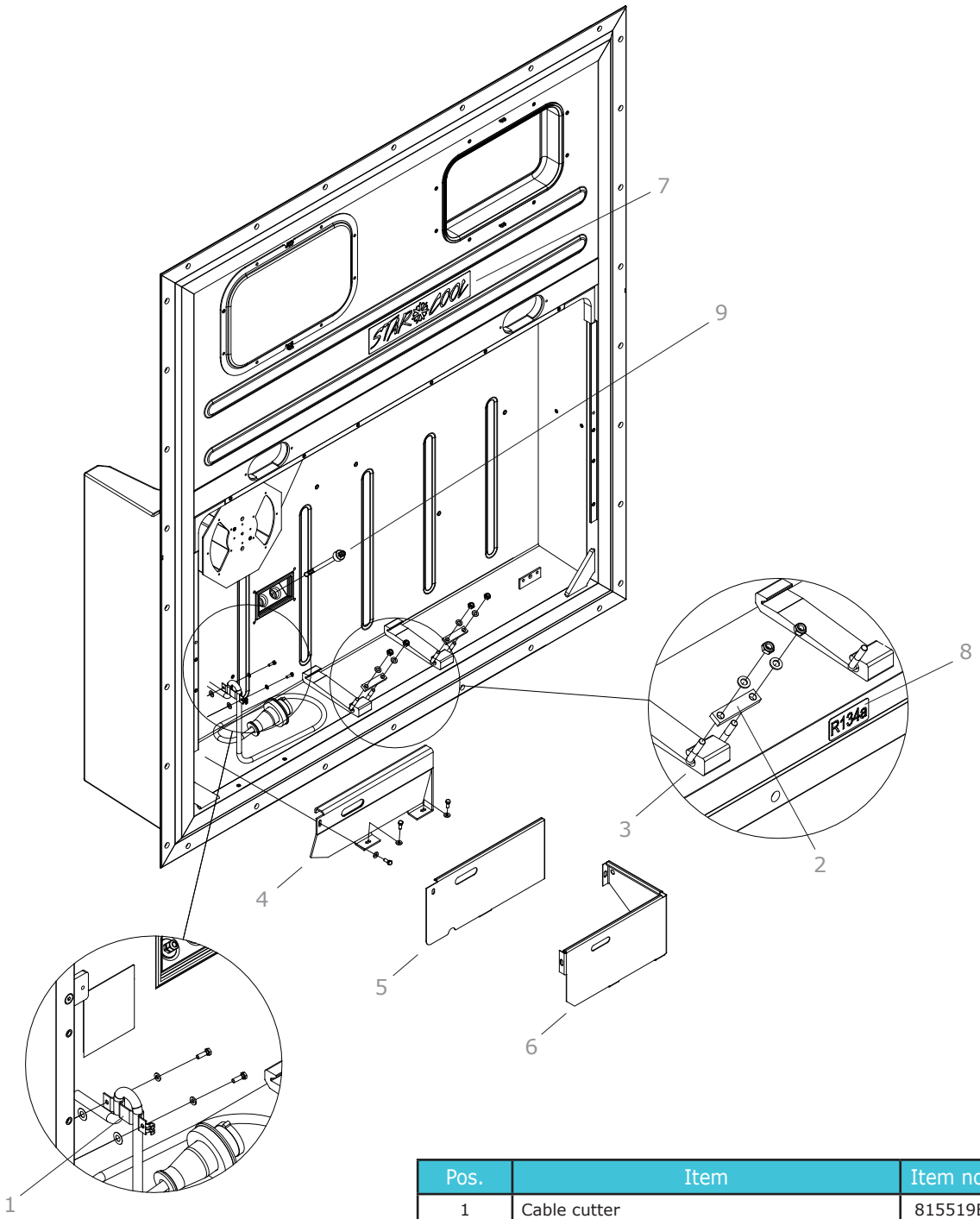

Pos.	Item	Item no.
1	Cable cutter	815519B
2	Cross rod, comp. mounting	815546B
3	Thread rod, comp. mounting	815545B
4	Power cable cover	815505B
5	Power cable cover	815505C
6	Power cable cover	815505D
7	Decal, Star Cool	815586B
8	Decal, R134a	815572B
9	Supply tube assembly	815214B
-	Cust. seal grill air ex., right	813565B
-	Cust. seal grill air ex., left	813566B
-	Decal, fan starts automatically	815570B

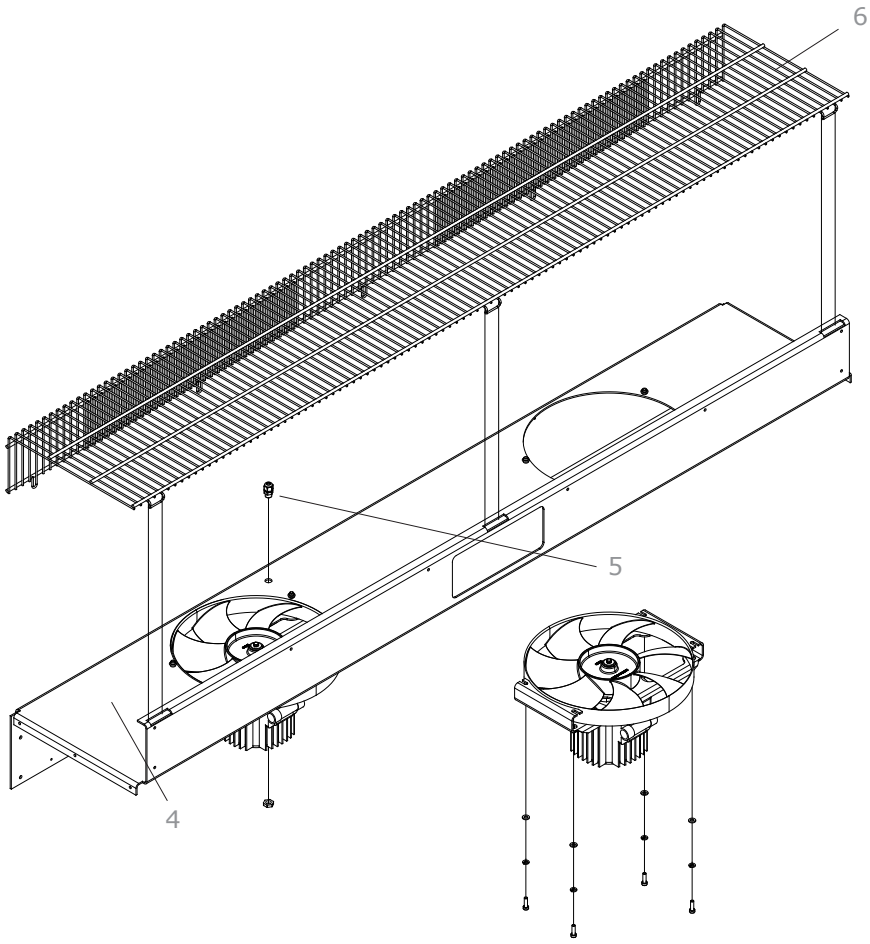

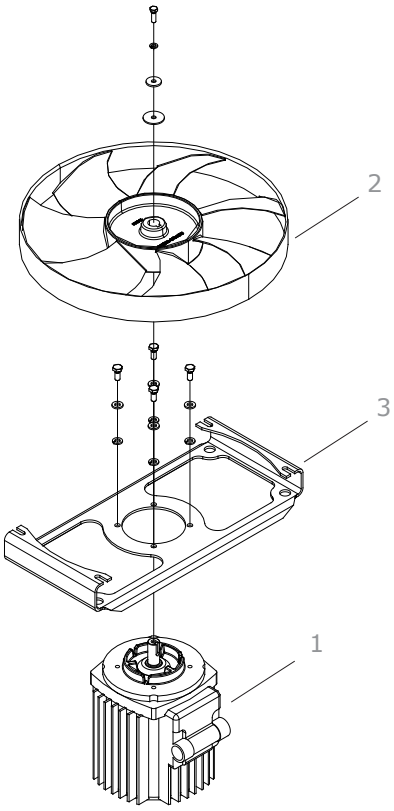

Pos.	Item	Item no.
1	Motor, evaporator fan	819589B
2	Fan blade, evaporator	819542C
3	Motor bracket, evap. fan	811537D
4	Mount plate top, evap. fans	811504C
5	Cable gland, M 12	819572B
6	Fan grill, evaporator (SCI)	811506C
-	Service kit, evaporator motor	818230B
-	Mount plate top, evap. fans (CA)	811504D

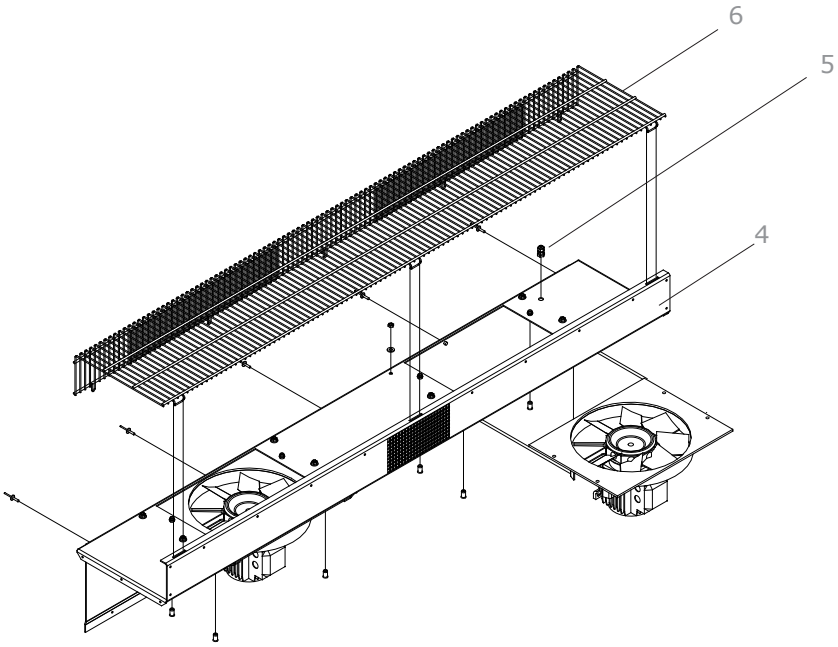

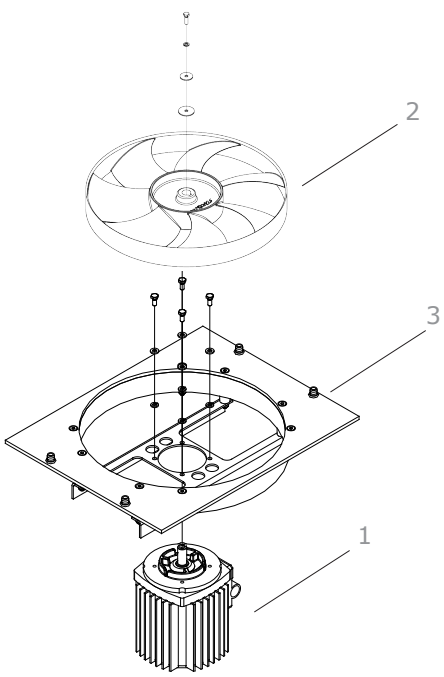

Pos.	Item	Item no.
1	Motor, evaporator fan	819589B
2	Fan blade, evaporator	819542C
3	Inlet ring, evaporator fan	811215B
4	Mount plate top, evap. fans	811504B
5	Cable gland, M 12	819572B
6	Fan grill, evaporator	811506B
-	Service kit, evaporator motor	818230B

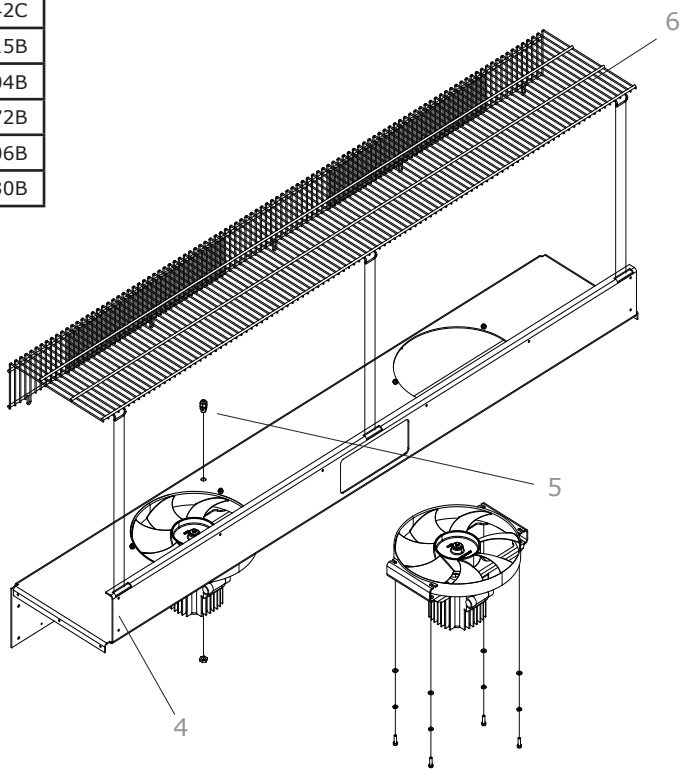

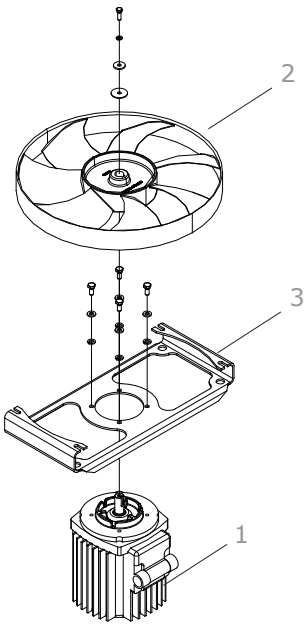

Pos.	Item	Item no.
1	Motor, evaporator fan	819589B
2	Fan blade, evaporator	819542C
3	Motor bracket, evap. fan	811537D
4	Mount plate top, evap. fans	811504C
5	Cable gland, M 12	819572B
6	Fan grill, evaporator	811506B
-	Service kit, evaporator motor	818230B

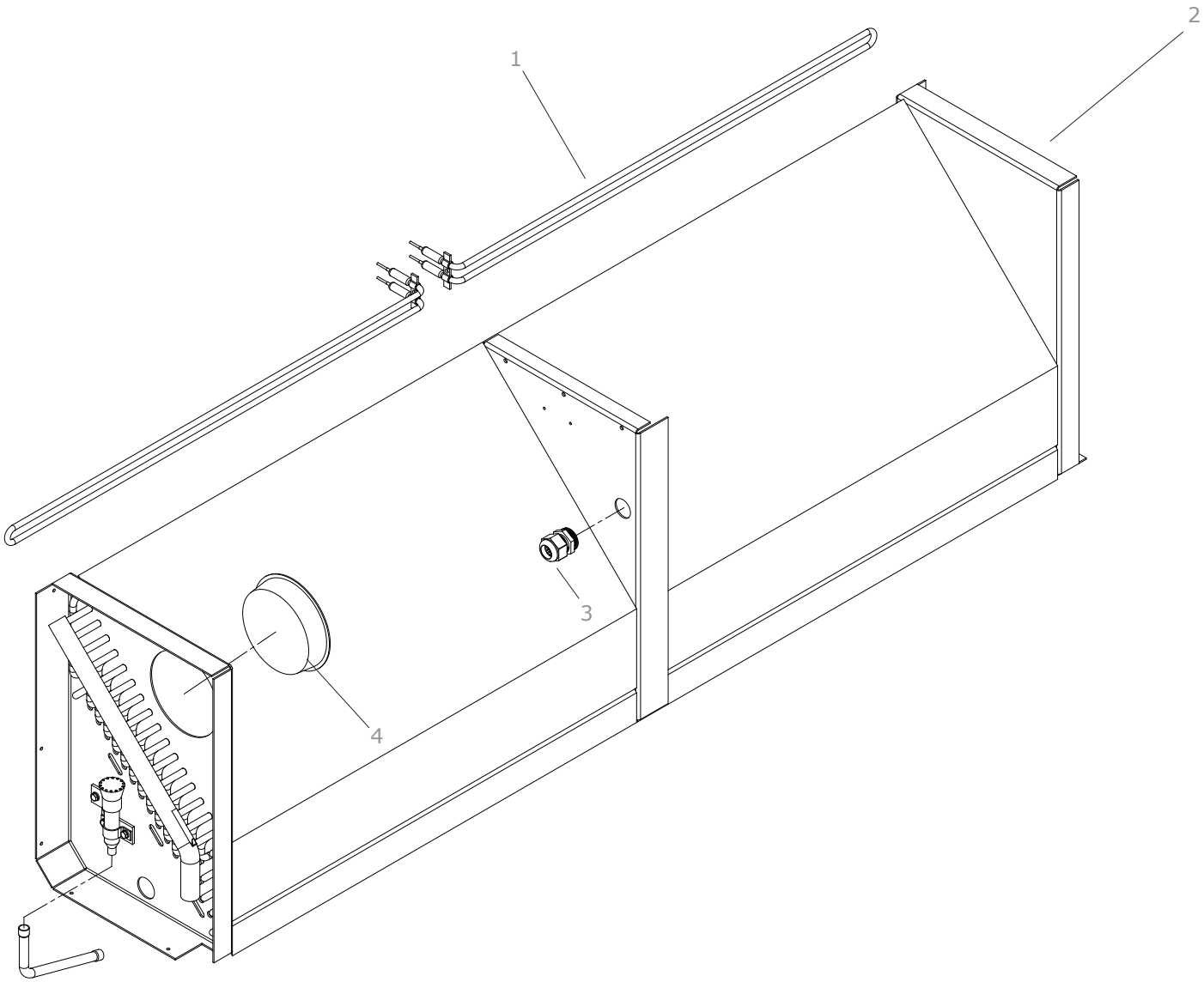

Pos.	Item	Item no.
1	Defrost heater, evaporator	811523B
2	Evaporator coil	811524B
3	Cable gland, M 32	819650B
4	Cover, PVC	811550B

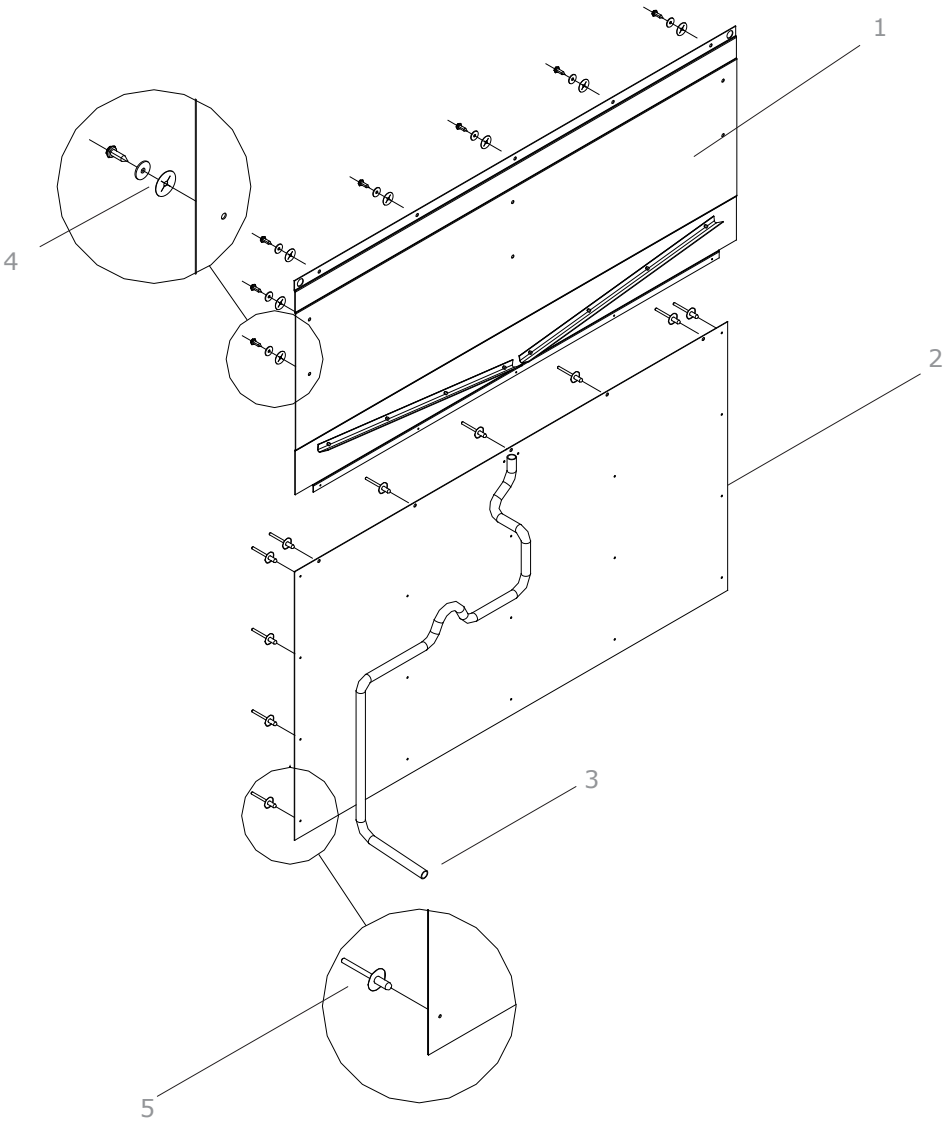

Pos.	Item	Item no.
1	Back plate, evap (SCI 9'6")	811204D
2	Cover plate, back (SCI 9'6")	815514D
-	Decal, USDA sensor placement	815590B
3	Drain hose	815566C
4	Screw and washer kit (100 pcs)	818265B
5	Rivets, 4.8 mm (100 pcs)	818266B
-	Back plate, evap (SCI 8'6")	811204E
-	Cover plate, back (SCI 8'6")	815514E

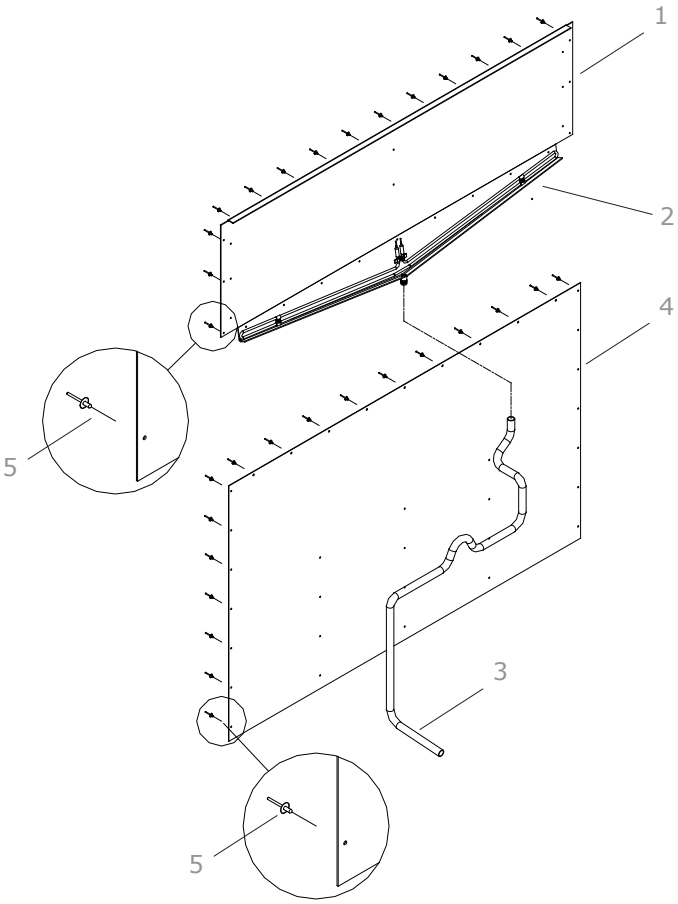

Pos.	Item	Item no.
1	Back plate, evaporator	811204B
2	Defrost heater, tray	811522B
3	Drain hose	815566B
4	Cover plate, back	815514B
-	Decal, USDA sensor placement	815590B
5	Rivets, 4.8 mm (100 pcs)	818266B

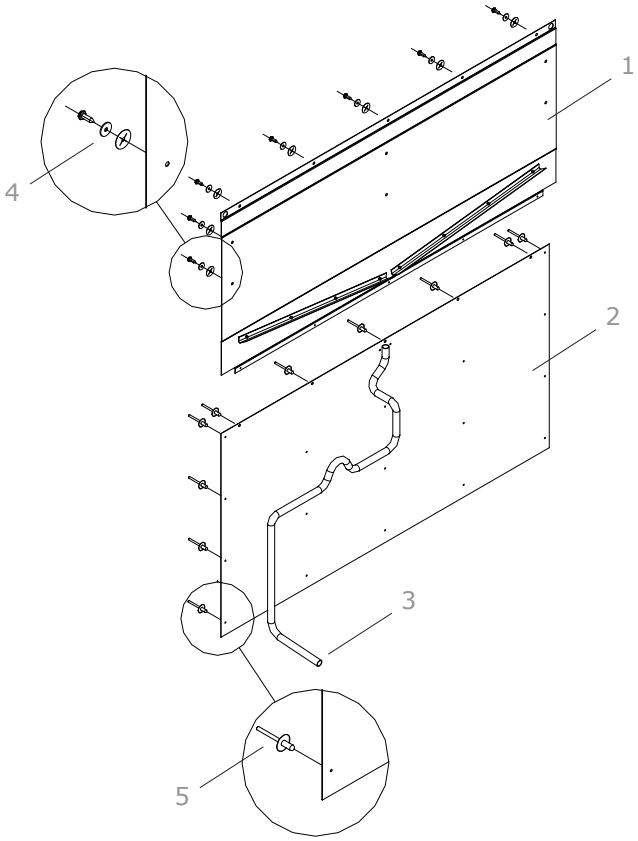

Pos.	Item	Item no.
1	Back plate, evaporator	811204C
2	Cover plate, back	815514C
-	Decal, USDA sensor placement	815590B
3	Drain hose	815566B
4	Screw and washer kit (100 pcs)	818265B
5	Rivets, 4.8 mm (100 pcs)	818266B

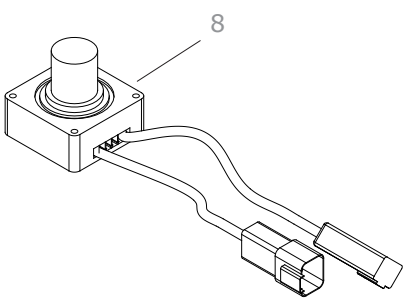

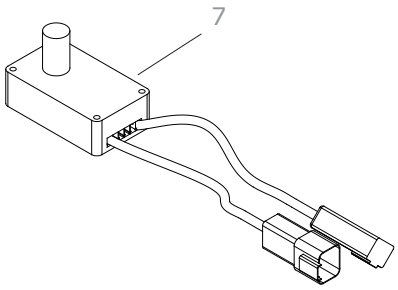

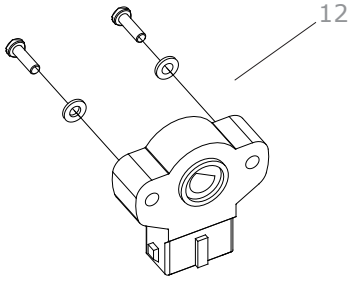

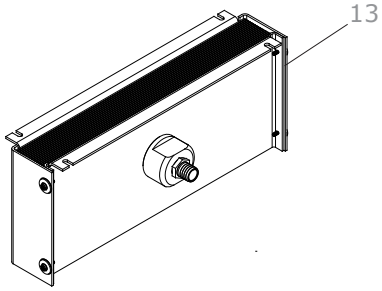

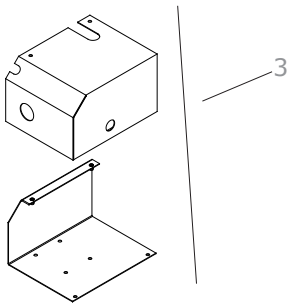

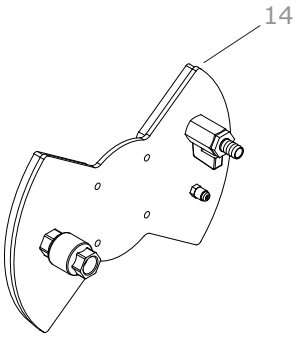

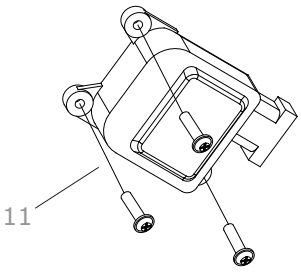

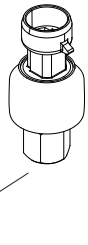

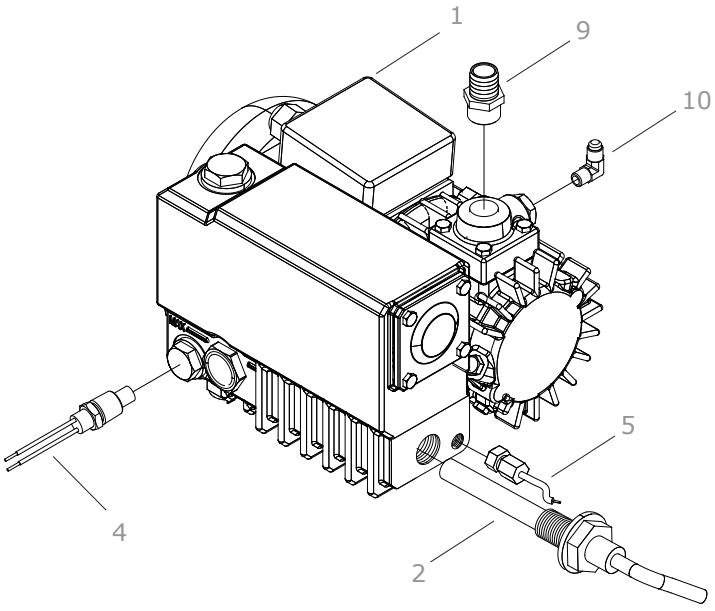

Pos.	Item	Item no.
1	Vacuum pump	819530A
2	Heating element	818538A
-	Oil filter, vacuum pump	818669A
-	Oil, vacuum pump	818668A
3	Shield, vacuum pump	818225A
4	Thermal circuit breaker	818524A
5	Temperature sensor	818550A
6	Pressure transmitter, vacuum	819605A
7	Sensor, O_2 (CA)	818740A
8	Sensor, CO_2 (CA/AV)	818745A
9	Hose connector	819877A
10	Nipple, pressure transmitter	819746B
11	Air ex. motor (CA/AV)	818275A
12	Air ex. sensor	818276A
13	CA membrane module, complete	815242A
14	Test damper (CA)	818251A
-	Cable, vacuum pump motor	818752A
-	Cable, p. transmitter (NSK)	818564B
-	Manometer, digital	818820A
-	Vacuum hose, 3/4”	819875A
-	2 pin connector (3.81 mm / 90°)	818770A
-	2 pin connector (5.08 mm / 90°)	818778A
-	3 pin connector (3.81 mm / 90°)	818771A
-	4 pin connector (3.81 mm / 90°)	818772A
-	Controller module (CA)	818512A
-	Cable, air ex. motor (CA/AV)	818754A
-	Decal, electrical diagram CA	815589D
-	Drain plug, container	818800A
-	Mount plate top, evap.fans (CA)	811504D

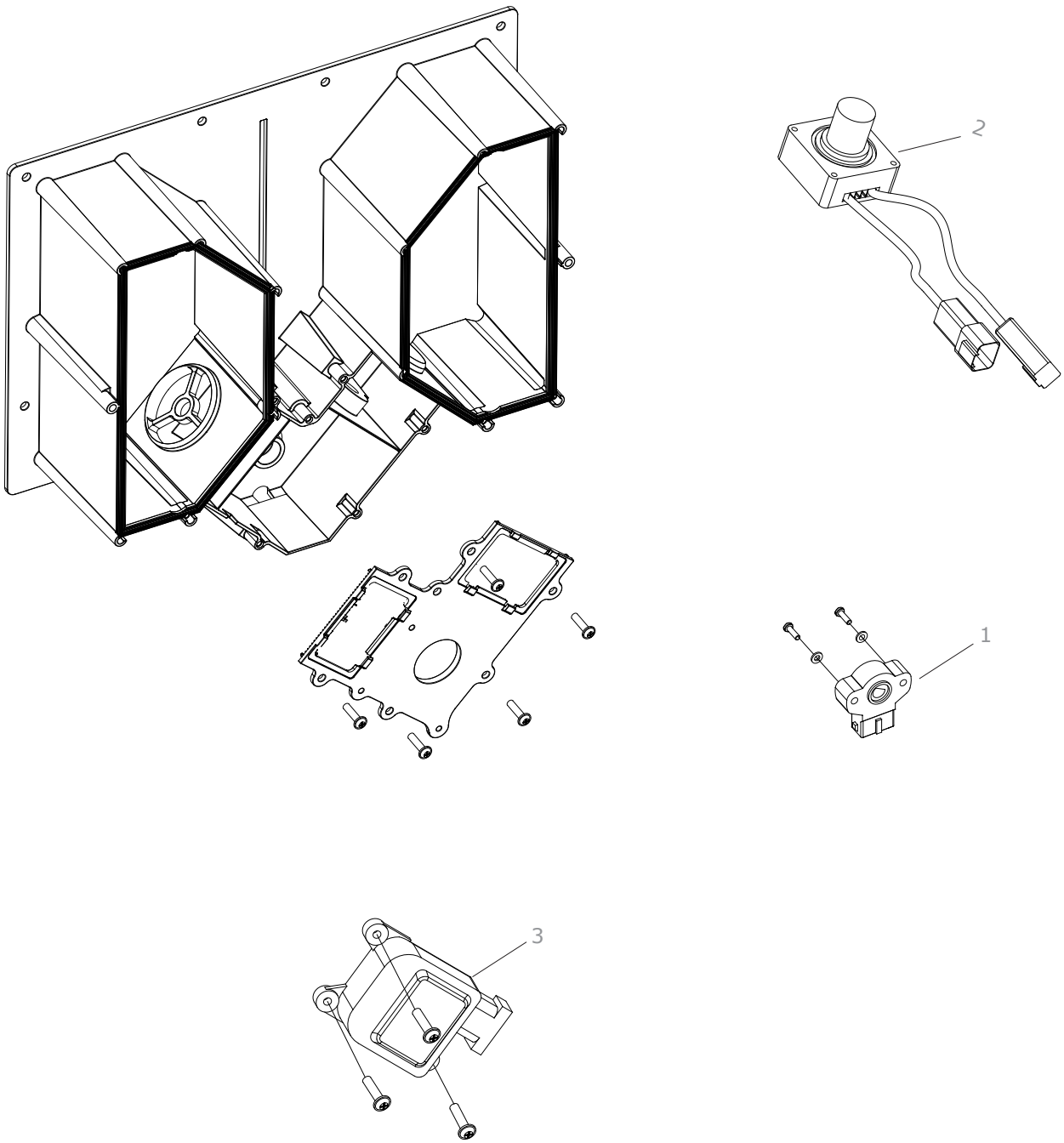

Pos.	Item	Item no.
1	Air ex. sensor	818276A
2	Sensor, CO_2 (CA/AV)	818745A
3	Air ex. motor (CA/AV)	818275A
-	Cable, air ex. motor (CA/AV)	818754A

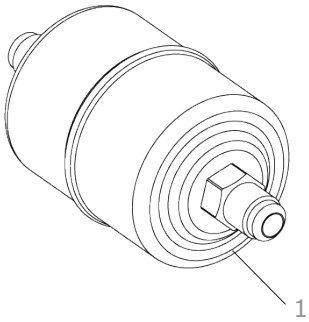

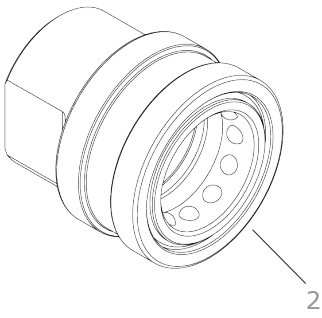

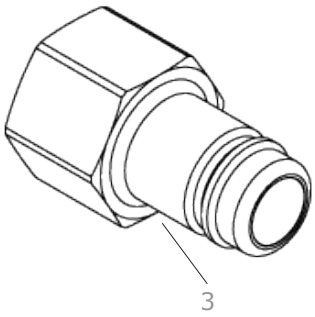

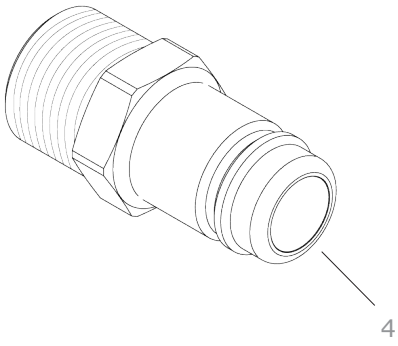

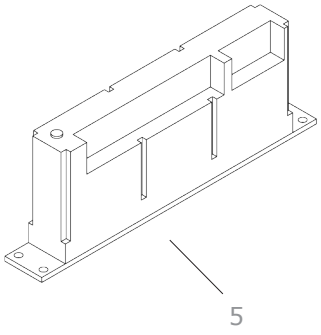

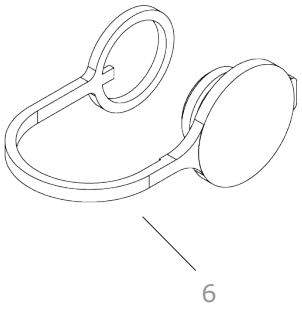

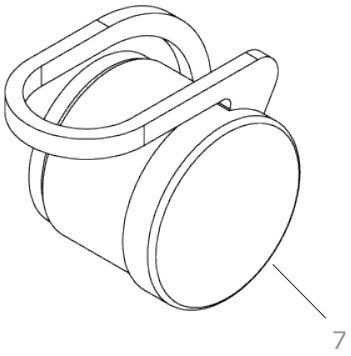

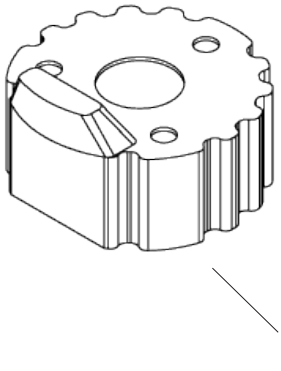

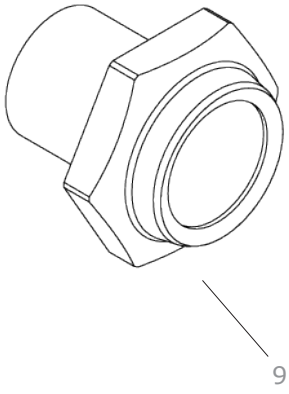

Pos.	Item	Item no.
1	Drying filter	819502A
2	Coupling WCC, female	819536C
3	Coupling WCC, male (SC only)	819537C
4	Coupling WCC, male	819545B
5	RMM module	818621B
6	Plug, water outlet coupling	819540B
7	Plug, water inlet coupling	819541B
8	USDA socket cap	819634A
9	Sight glass, receiver kit	818235B
-	Probe NTC 2.5 mm (60 pcs)	818555A
-	Probe PT100 4.4 mm	818556A
-	Power plug (10 pcs)	818559A
-	Filter, Ethylene	818805A
-	Splice kit, power cable	818835A
-	Retriever socket cap	819630B

Item	Page	Item no.
2 pin connector (3.81 mm / 90°)	11,30	818770A
2 pin connector (5.08 mm / 90°)	11,30	818778A
3 pin connector (3.81 mm / 90°)	11,30	818771A
4 pin connector (3.81 mm / 0°)	11	818776A
4 pin connector (3.81 mm / 90°)	11,30	818772A
5 pin connector (3.81 mm / 0°)	11	818777A
5 pin connector (3.81 mm / 90°)	11	818773A
6 pin connector (3.81 mm / 90°)	11	818774A
10 pin connector (3.81 mm / 90°)	11	818775A
Air ex. damper, assembly	22,23	818250C
Air ex. module, camshaft	23	818272A
Air ex. module, complete	23	818270A
Air ex. module, front	23	818274A
Air ex. module, insect mesh	23	818273A
Air ex. module, valves	23	818271A
Air ex. motor (CA/AV)	11,23,30,31	818275A
Air ex. sensor	9,11,22,23,30,31	818276A
Air ex. sensor bracket	22	815206B
Air release valve, receiver	16,17	819747B
Angle, cable gland M 16	20	819775B
Angle, cable gland M 20	20	819776B
Auxiliary contact (red dot)	11	818522C
Auxiliary contact (white dot)	9,11	818522B
Back plate, evaporator	29	811204B
Back plate, evaporator	29	811204C
Back plate, evap (SCI 9'6")	28	811204D
Back plate, evap (SCI 8'6")	28	811204E
Batt. pack CIM 5	9	818536B
Batt. pack, rechargeable CIM 6	11	818536C
Bearing bush, crankcase side	19	818856A
Bearing bush	19	818857A
Bolt, compressor stop valve	19	818655B
Bolt, cylinder head, large	19	818612A
Bolt, cylinder head, small	19	818613A
Bolt, service valve LP	19	818660B
BSE55, compressor oil	19	818667B
CA membrane module, complete	30	815242A
Cable cutter	24	815519B
Cable gland, M 12	25,26	819572B
Cable gland, M 16	20	819672B
Cable gland, M 20	20	818665B
Cable gland, M 32	27	819650B
Cable set, internal CIM 5	9	818461B
Cable set, internal CIM 6	11	818461C
Cable set, X1 - X2 - X3 CIM 5	9	818561B
Cable, air ex. motor (CA/AV)	11,23,30,31	818754A
Cable, air ex. sensor	9,11	818572B
Cable, data retrival	9,11	818575A
Cable, CA controller module	11	818465A
Cable, FC communication	9,11	818566B
Cable, FC power	9,11	818565B
Cable, humidity sensor CIM 5	9	818563A
Cable, humidity sensor CIM 6	11	818563B

Item	Page	Item no.
Cable, p. transmitter (AKS)	9	818564A
Cable, p. transmitter (NSK)	9,11,30	818564B
Cable, solenoid coil	11	818760A
Cable, vacuum pump motor	11,30	818752A
Cap, compressor stop valve	19	818630B
Cap, evacuation valve, HP	19	818632B
Cap, evacuation valve, LP	19	818631B
Cap, service valve, LP	19	818629B
Check valve	19	818864A
Compressor	19	818658B
Compressor crankshaft	19	818854A
Compressor cylinder liner	19	818851A
Compressor gaskets, complete	19	818872A
Compressor oil pump, complete	19	818869A
Compressor pistons, complete	19	818850A
Compressor stop valve	19	819750B
Compressor valve plate, HP	19	818602B
Compressor valve plate, LP	19	818601B
Condenser coil	14	819526B
Condenser frame, round	13	814201B
Cond. frame, square (L=1625 mm)	13	814201C
Cond. frame, square (L=1701 mm)	13	814201D
Connecting rod, complete (LP)	19	818860A
Connecting rod, complete (HP)	19	818861A
Contactor	9,11	818521B
Controller door, CIM 5	9	818310B
Controller door, CIM 6	11	818310C
Controller door, complete CIM 5	9	818320B
Controller module (CA)	11,30	818512A
Controller module CIM 5	9	818255C
Controller module CIM 6	11	818510D
Coupling WCC, female	32	819536C
Coupling WCC, male(SC only)	32	819537C
Coupling WCC, male	32	819545B
Cover foil, LED CIM 5	9	818542B
Cover foil, LED CIM 6	11	818542C
Cover foil, On/Off PCB CIM 5	9	818544B
Cover plate, air ex. (L=594 mm)	6	815208B
Cover plate, air ex. (L=610 mm)	6	815208C
Cover plate, air ex. (L=610 mm)	6	815208E
Cover plate, air ex. (SCI)	6	815208D
Cover plate, cond. (L=1715mm)	7	815209B
Cover plate, cond. (L=1751mm)	7	815209C
Cover plate, cond. (SCI) (L=1715mm)	7	815209D
Cover plate, back	29	815514B
Cover plate, back	29	815514C
Cover plate, back (SCI 9'6")	28	815514D
Cover plate, back (SCI 8'6")	28	815514E
Cover, controller door CIM 5	9	814673B
Cover, PVC	27	811550B
Cross rod, comp. mounting	24	815546B
Cust. seal grill air ex., left	24	813566B
Cust. seal grill air ex., right	24	813565B

Item	Page	Item no.
Cylinder head gasket kit	19	818605B
Cylinder head, HP with gasket	19	818611B
Cylinder head, LP with gasket	19	818610B
Decal, controller menu CIM 5	7	815588B
Decal, controller menu CIM 6	7	815588C
Decal, discon. before welding	9,11	815578B
Decal, electrical diagram CA	11,30	815589D
Decal, electrical diagram CIM 5	9	815589B
Decal, electrical diagram CIM 6	11	815589C
Decal, fan starts automatically	24	815570B
Decal, FC bypass	20	815594C
Decal, FC connection	20	815591C
Decal, PTI stickers	7	815573B
Decal, R134a	24	815572B
Decal, Star Cool	24	815586B
Decal, USDA sensor placement	28,29	815590B
Decal, warning high voltage	9,11	815575B
Decal, warning hot components	7	815571B
Defrost heater, evaporator	27	811523B
Defrost heater, tray	29	811522B
Display PCB CIM 5	9	818515A
Drain hose	29	815566B
Drain hose	28	815566C
Drain plug, container	30	818800A
Drying filter	16,17,32	819502A
Economizer	15	814667B
Evacuation valve, HP	19	818626B
Evacuation valve, LP	19	818625B
Evaporator coil	27	811524B
Expansion valve, economizer	15	819737B
Expansion valve, evaporator	15	819738B
Fan blade, condenser	12,13	819543B
Fan blade, evaporator	25,26	819542C
Fan grill, cond., round	13	814541B
Fan grill, cond., square	12,13	814541C
Fan grill, evaporator	25,26	811506B
Fan grill, evaporator (SCI)	25	811506C
FC, gasket service kit	20	818233B
FC, mounting kit	20	818232B
Filter mounting ring	16,17	814538B
Filter, Ethylene	32	818805A
Frequency converter, complete	20	818242C
Frequency converter cover	20	814653C
Frequency conv. safety cover	20	814654C
Fuse, 0.4 A	11	818531A
Fuse, 0.63 A	9	818546B
Fuse, 6.3 A	9	818545B
Fuse, 10 A	9	818530A
Fuse holder, 0.4 A	11	818534A
Gasket, compressor oil plug	19	818636B
Gasket, compressor stop valve	19	818656B
Gasket, service valve, LP	19	818661B
Heating element	30	818538A

Item	Page	Item no.
High pressure switch	9,11,19	819501A
Hinge part CIM 6	11	814642C
Hinge part 1	9	814642B
Hinge part 2	9,21	814643B
Hinge part, inspection cover	21	815534B
Hinge pin	9,11,21	814644B
Hose connector	30	819877A
Hot gas valve	15	819740B
Hot gas valve	15	819740C
Hot gas valve, service kit	15	818675B
Humidity sensor CIM 5	9	818551A
Humidity sensor CIM 6	11	818551B
Inlet ring, evaporator fan	26	811215B
Insect mesh, air exchange	22	815553B
Inspection cover, complete	21	815210B
Inspection cover, complete	21	815210C
Insulation, economizer	15	814571B
Interlock, contactor	9,11	818523B
Keypad CIM 5	9	818527B
LED PCB CIM 5	9	818517A
Main circuit breaker CIM 5	9	818520A
Main circuit breaker CIM 6	11	818520B
Manometer, digital	30	818820A
Melt fuse kits	16,17	818236B
Motor bracket, evap. fan	25,26	811537D
Motor cable, FC and compressor	20	814247C
Motor, condenser fan	12,13	819590B
Motor, evaporator fan	25,26	819589B
Mount plate top, evap. fans	26	811504B
Mount plate top, evap. fans	25,26	811504C
Mount plate top, evap. fans (CA)	25,30	811504D
Nipple, pressure transmitter	30	819746B
Oil filter, vaccum pump	30	818669A
Oil filter, compressor	19	818638B
Oil, vacuum pump	30	818668A
On/Off PCB CIM 5	9	818525B
On/Off switch CIM 6	11	818525C
O-ring, sight glass	19	818634B
Permanent magnet	15	818652A
Plug, compressor	19	819745B
Plug, water inlet coupling	16,32	819541B
Plug, water outlet coupling	16,32	819540B
Power cable cover	24	815505B
Power cable cover	24	815505C
Power cable cover	24	815505D
Power meas module CIM 6	11	818511C
Power meas PCB CIM 5	9	818511B
Power plug (10 pcs)	32	818559A
Pressure transmitter, vacuum	30	819605A
Pressure transmitter, LP (AKS)	9,19	819503A
Pressure transmitter, LP (NSK)	9,11,19	819503C
Pressure transmitter, HP (NSK)	9,11,19	819504C
Pressure transmitter, HP (AKS)	9,19	819504A

Item	Page	Item no.
Pressure relief valve	19	818866A
Probe NTC 2.5 mm (60 pcs)	32	818555A
Probe PT100 4.4 mm	32	818556A
Receiver	17	814540B
Receiver, water cooled cond.	16	814539B
Receptacle screw, contr. door	9	819695C
Retainer for screw	9,11	819694B
Retriever socket	9,11	819595B
Retriever socket cap	9,11,32	819630B
Rivets, 4.8 mm (100 pcs)	28,29	818266B
RMM module	9,11,32	819621B
Schräder valve, angle	19	819754A
Schräder valve, straight	19	819753A
Schräder valve, T	19	819755B
Screw and washer kit (100 pcs)	28,29	818265B
Screw, controller door CIM 5	9	819693C
Screw, controller door CIM 6	11	819693D
Seal, controller door CIM 5	9	814562B
Seal, controller door CIM 6	11	818790A
Seal, cover plate cond.	7	815509B
Seal, cover plate, air ex.	6	815508B
Sensor, CO_2 (CA/AV)	11,30,31	818745A
Sensor, O_2 (CA)	11,30	818740A
Service kit, condenser motor	12,13	818231B
Service kit, evaporator motor	25,26	818230B
Service valve, LP	19	818623B
Shield, vacuum pump	30	818225A
Sight glass	19	818633B
Sight glass, receiver kit	16,17,32	818235B
Solenoid coil, 10W 24VAC	11,15	818554B
Solenoid coil, 14W 24VDC	9,15	818553A
Solenoid coil, 18W 24VDC	9,15	818554A
Splice kit, power cable	32	818835A
Splice kit, ASK to NSK	9,19	818260A
Spring, compressor oil filter	19	818637B
Stop valve, receiver	16,17	819500C
Suction filter, compressor	19	818662B
Supply tube assembly	24	815214B
Temperature sensor	9,11,30	818550A
Terminal block PCB CIM 5	9	818526C
Terminal block, compressor	19	818639B
Thermal circuit breaker	30	818524A
Test damper (CA)	30	818251A
Thread rod, comp. mounting	24	815545B
Threaded bushing, FC mounting	19	819766B
Tool, hot gas valve	15	818676B
Transformer, 145 VA CIM 5	9	818518B
Transformer, 105 VA CIM 6	11	818518C
USDA socket	9,11	819633A
USDA socket cap	9,11,32	819634A
User panel CIM 6	11	818513A
Vacuum hose, 3/4”	30	819875A
Vacuum pump	30	819530A
Water inlet coupling, male	16	819537C
Water outlet coupling, female	16	819536C
Wing screw kit (10 pcs)	22,23	818267B

24-hour hotline support

Call us at +45 7364 3500 or send us an e-mail at service@starcool.dk. Our service department is available 24 hours a day, 7 days a week - providing easy access to the answers you need.

Guideline: Order procedure

Purchase spare parts for the Star Cool reefer machine fast and reliable via the internet.

Customers, service providers and other repair shops order directly from Star Cool. Vessels must contact the relevant customer (shipping line) for ordering.

All orders are to be placed on Star Cool e-Business. Our staff will send out the ordered parts through the distribution centre located nearest to the desired delivery address.

Please kindly register at www.starcool.dk, in order be able to purchase spare part from Star Cool e-Business.

Should you have any problems on registeration or receiving login and password, please contact starcool@starcool.dk. Further, if you have any inquries regarding your orders, please contact Sales department at sales@starcool.dk; or questions regarding the spare parts, contact service department service@starcool.dk.

Bjerndrupvej 47
6360 Tinglev, Denmark
Phone: +45 73 64 34 00
Fax.: +45 73 64 35 69
E-mail: starcool@starcool.dk
www.starcool.dk

STAR COOL
... Cool Thinking!

Version 810910B - April 2010

© Copyright 2010 Maersk Container Industry AS